SOUTH PLACER MUNICIPAL UTILITY DISTRICT

FOOTHILL TRUNK SEWER REPLACEMENT PROJECT

VOLUME 2 - DRAWINGS

SOUTH PLACER MUNICIPAL UTILITY DISTRICT
5807 SPRING VIEW DRIVE
ROCKLIN, CA 95677
(916) 786-8555

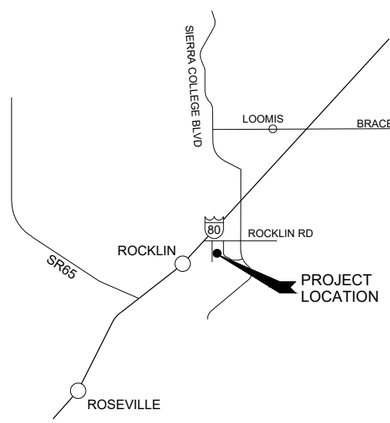

VICINITY MAP
NTS

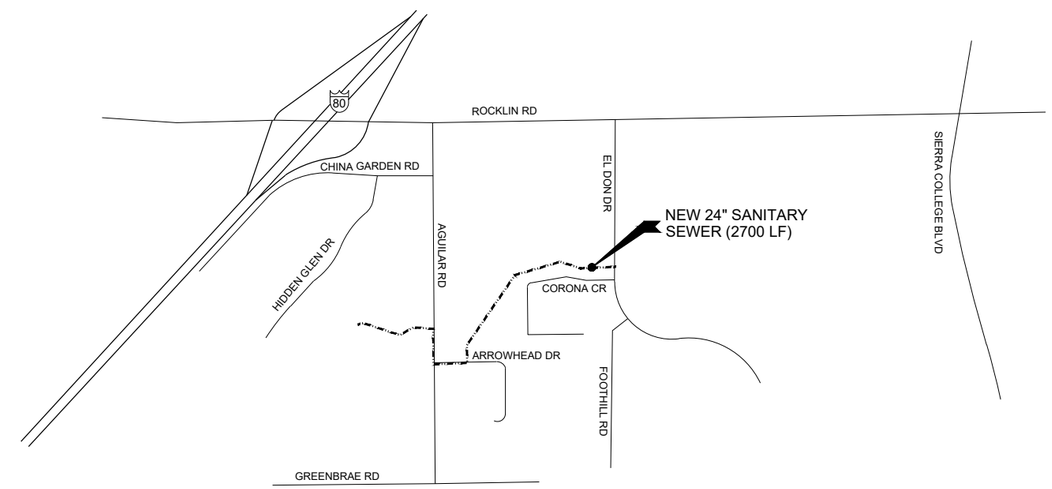

LOCATION MAP
NTS

FEBRUARY 2020
CONFORMED DOCUMENTS

APPROVED FOR CONSTRUCTION BY:

_____ DATE:_____

SOUTH PLACER MUNICIPAL UTILITY DISTRICT
MR. ERIC NIELSEN, - DISTRICT ENGINEER

WATERWORKS ENGINEERS

REGISTERED PROFESSIONAL ENGINEER
MICHAEL J. ISAACS
No. C67984
CIVIL
STATE OF CALIFORNIA
10/8/19

REGISTERED PROFESSIONAL ENGINEER
TIMOTHY JAMES MORRISSEY LEWIS
No. C58687
CIVIL
STATE OF CALIFORNIA
10/8/19

FOR MORE INFORMATION PLEASE CONTACT:

TIM LEWIS, P.E.
424-308-0307

JOB NUMBER: 14-068 FILENAME: 1468D-G-D-CD.DWG PLOT DATE: 2/19/2020 3:05 PM

DRAWING INDEX

SHEET NUMBER	SHEET TITLE	TITLE
	GENERAL	
1	G-1	TITLE SHEET
2	G-2	BID ITEM, DRAWING INDEX & KEY MAP
3	G-3	ABBREVIATIONS & LEGEND
4	G-4	GENERAL NOTES
5	G-5	GENERAL NOTES CONT
6	G-6	HORIZONTAL CONTROL PLAN
	DEMOLITION	
7	D-1	DEMOLITION & CONSTRUCTION SEQUENCING
8	D-2	TREE REMOVAL LIST
9	D-3	TREE REMOVAL & PROTECTION PLAN STA: 10+00 TO 19+75
10	D-4	TREE REMOVAL & PROTECTION PLAN STA: 19+75 TO 28+00
11	D-5	TREE REMOVAL & PROTECTION PLAN STA: 28+00 TO END
	CIVIL	
12	C-1	PLAN & PROFILE STA: 10+00 TO 15+00
13	C-2	PLAN & PROFILE STA: 15+00 TO 19+75
14	C-3	PLAN & PROFILE STA: 19+75 TO 24+00
15	C-4	PLAN & PROFILE STA: 24+00 TO 28+00
16	C-5	PLAN & PROFILE STA: 28+00 TO 33+00
17	C-6	PLAN & PROFILE STA: 33+00 TO 37+22
18	C-7	GRADING & PAVING PLAN 1
19	C-8	GRADING & PAVING PLAN 2
20	C-9	GRADING & PAVING PLAN 3
21	C-10	GRADING & PAVING PLAN 4
22	C-11	PLAN & PROFILE 045-141-016 PROPERTY
	CIVIL DETAILS	
23	CD-1	CIVIL DETAILS
24	CD-2	CIVIL DETAILS, CONT
25	CD-3	CIVIL DETAILS, CONT
26	CD-4	CITY OF ROCKLIN STANDARD DETAILS
	STRUCTURAL	
27	S-1	JS-1 DETAILS
	STANDARD DETAILS	
28	SD-1	WWE STANDARD DETAILS
29	SD-2	BMPS & EROSION CONTROL DETAILS

UTILITY REPRESENTATIVES

UTILITY	COMPANY	REPRESENTATIVE	TELEPHONE
SEWER	SPMUD	MR. ERIC NIELSEN	(916) 786-8522 x30
WATER	PCWA	MR. BRENT SMITH	(530) 823-4850
ELECTRIC & GAS	PG&E	MS. MARY WESTFALL	(530) 889-3256
ROADS & STORM DRAIN	CITY OF ROCKLIN	MS. LYNN TOTH	(916) 625-5140
TELEPHONE	AT&T	MS. CAROL PRINCE	(916) 409-1384
CABLE	WAVE BROADBAND	MR. KIRK ELLINGSON	(866) 928-3123
ROADS & STORM DRAIN	PLACER COUNTY	MR. KEVIN TABER	(530) 745-7565

BID ITEMS

1

ITEM	DESCRIPTION	QTY	UNIT
1	MOBILIZATION-DEMOBILIZATION [A]	1	LS
2	SPECIAL PROJECTS CONSTRAINTS, GENERAL REQUIREMENTS, SPECIAL INSPECTION AND PERMITS	1	LS
3	SHEETING/SHORING/BRACING	1	LS
4	BY-PASS PUMPING & TEMPORARY FACILITIES	1	LS
5	TRAFFIC CONTROL & SIGNAGE	1	LS
6A	TRENCH RESTORATION - PUBLIC ROAD	2,658	SF
6B	TRENCH RESTORATION - PRIVATE ROAD	16,591	SF
6C	2" GRIND AND OVERLAY	5,911	SF
6D	12' WIDE TRENCH RESTORATION	1	LF
7A	4" SS LATERALS	261	LF
7B	6" SS LATERALS	10	LF
8	8" SS PIPE	15	LF
9A	24" SS PIPE - PARALLEL	1,468	LF
9B	24" SS PIPE - REPLACE-IN-PLACE	1,261	LF
9C	DELAY DUE TO PROJECT ARCHAEOLOGIST	80	HR
9D	GARDEN RELOCATION AND REPLACEMENT	1	1
9E	ABOVE-GROUND POOL RELOCATION AND REPLACEMENT	1	1
9F	WOOD DECK RELOCATION AND REPLACEMENT	1	1
10	NEW 60" DIAMETER SANITARY SEWER MNAHOLES	18	EA
11	JUNCTION STRUCTURE & ACCESS ROAD	1	LS
12	TRENCH STABILIZATION	60	CY
13	ROCK EXCAVATION	500	CY
14	DEWATERING	1	LS
15	EARTH BERM & DRAINAGE	1	LS
16A	TREE REMOVAL	42	EA
16B	TREE REPLANTING	19	EA
17	EROSION CONTROL & HYDROSEEDING	1	LS
18	ABONDON SS PIPE	1,420	LF
19	ABONDON SSMH	6	EA
20	CMU WALL, 16" WIDE STEEL ROLLING GATE & MISC ITEMS	1	LS
21	FRP OUTSIDE DROP STRUCTURE	1	LS
22	BID ALTERNATE: EXPLORATORY TRENCH 1A (STA 23+20 TO 16+00)	1	LS
23	BID ALTERNATE: EXPLORATORY TRENCH 1B (STA 23+20 TO 24+10, AND STA 25+00 TO 26+25)	1	LS

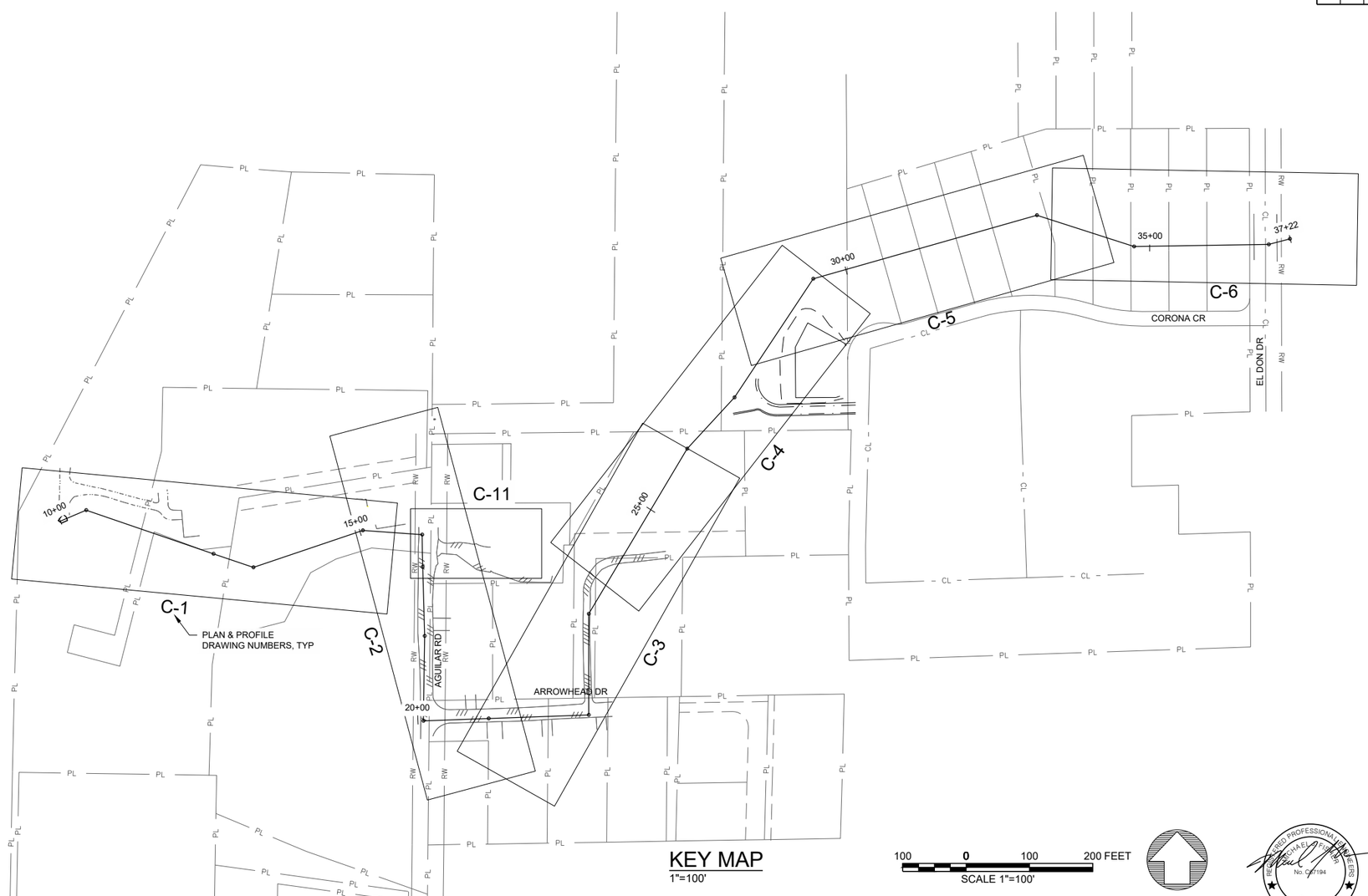

KEY MAP
1"=100'

SCALE 1"=100'

NO.	DATE	REVISION	BY	APVD
1	02/13/20	ADDENDUM REVISIONS IN CONFORMED SET	DL	TL

DESIGN M FISHER
DRAWN T LEWIS
CHECKED M FISHER
APPROVED M FISHER

SOUTH PLACER MUNICIPAL UTILITY DISTRICT
SOUTH PLACER MUNICIPAL UTILITY DISTRICT

WATERWORKS ENGINEERS
1322 Blue Oaks Blvd, Suite 300 • Roseville, CA 95678 • 916-790-2998

SOUTH PLACER MUNICIPAL UTILITY DISTRICT
FOOTHILLS TRUNK SEWER REPLACEMENT PROJECT

GENERAL
BID ITEM, DRAWING INDEX & KEY MAP

REGISTERED PROFESSIONAL ENGINEER
MICHAEL P. FISHER
No. C 67194
CIVIL
STATE OF CALIFORNIA
10-8-2019

DATE FEBRUARY 2020
PROJECT NUMBER 14-068
DRAWING NUMBER G-2
SHEET NUMBER 2

L:\CAD\PROJECTS\14-068 SPMUD FOOTHILLS TRUNK SEWER_(S)\DRAWINGS\DELIVERABLES\WORKING ALIGNMENTS\FINAL CONTRACT SET\1468D-G-D-CD.DWG

JOB NUMBER: 14-068 FILENAME: 1468D-G-D-CD.DWG PLOT DATE: 24-Feb-20 PLOT TIME: 08:41:57

ABBREVIATIONS

#	POUNDS, NUMBER
@	AT
AB	AGGREGATE BASE
AC	ASPHALT CONCRETE
ACP	ASBESTOS CEMENT PIPE
AFF	ABOVE FINISH FLOOR
ASTM	AMERICAN SOCIETY OF TESTING AND MATERIALS
BC	BEGINNING OF CURVE
BD	BOARD
BDRY	BOUNDARY
BF	BOTTOM OF FOOTING
BHW	BOTTOM OF HEADWALL
BLK	BLOCK
BM	BENCH MARK
BOC	BACK OF CURB
C	CHANNEL
CA	CONSTRUCTION ACCESS
CA/PE	CONSTRUCTION ACCESS & PERMANENT EASEMENT
C&G	CURB AND GUTTER
CB	CATCH BASIN
CCO	CONTRACT CHANGE ORDER
CCR	CALIFORNIA CODE OF REGULATIONS
CCS	CEMENT COATED STEEL
CF	CURB FACE, CUBIC FOOT
CGI	CURRY GROUP INTL.
CL	CLEARANCE OR CENTERLINE
CLF	CHAIN LINK FENCE
CLR	CLEAR
CMU	CONCRETE MASONRY UNIT
CO	CLEANOUT (SEWER)
COL	COLUMN
CONC	CONCRETE
CONN	CONNECTION
CONST	CONSTRUCTION
CONT	CONTINUOUS
CONTR	CONTRACTOR
COORD	COORDINATE
CMP	CORRUGATED METAL PIPE
CP	CONTROL POINT
CSP	CORRUGATED STEEL PIPE
CY	CUBIC YARD
DEG	DEGREE
DEC	TREE: DECIDOUS
DIA	DIAMETER
DIP	DUCTILE IRON PIPE
DL	DEAD LOAD
DR	DRAIN
DBH	DIAMETER AT BREAST HEIGHT
DWG	DRAWING
DWL	DOWEL
DWY	DRIVEWAY
(E) EXST	EXISTING
E	ELECTRIC
EA	EACH
EC	END OF CURVE
EG	EDGE OF GUTTER
EL	ELEVATION
ELB	ELBOW
EDC	EDGE OF CONCRETE
EP	EDGE OF PAVEMENT
EW	EDGE OF WATER
EXC	EXCAVATION
EXT	EXTERIOR
FB	FLUSHING BRANCH
FF	FINSHED FLOOR
FG	FINISHED GRADE
FH	FIRE HYDRANT
FL	FLOW LINE
FLG	FLANGE
FMJA	FLANGE MECHANICAL JOINT ADAPTER
FND	FOUNDATION
FOB	FACE OF BLOCK
FOC	FACE OF CURB
FRP	FIBER REINFORCED PLASTIC
FT	FOOT, FEET
FTG	FOOTING
G	GAS
GA	GAUGE
GALV	GALVANIZED
GM	GAS METER
GP	GUY POLE
GR	GRADE
GYP	GYPSUM
HB	HOSE BIB
HC	HANDICAP
HDR	HEADER
HORIZ	HORIZONTAL
HT	HEIGHT
ID	INSIDE DIAMETER
IRR	IRRIGATION
INV	INVERT
JP	JOINT POLE
JS	JUNCTION STRUCTURE
JT	JOINT
LIP	LIP OF GUTTER
LB	POUND
LF	LINEAR FOOT
LS	LUMP SUM, LIFT STATION
MAX	MAXIMUM
MH	MANHOLE
MIN	MINIMUM
MISC	MISCELLANEOUS
MJ	MECHANICAL JOINT
MKR	MARKER
MON	MONUMENT
MS	MOTION SENSOR
(N)	NEW
NG	NATURAL GRADE
NTS	NOT TO SCALE
OC	ON CENTER
OD	OUTSIDE DIAMETER
OG	ORIGINAL GROUND
OH	OVERHEAD
OHW	OVERHEAD WIRE (ELEC & TEL)
OPNG	OPENING
OSA	OUT SIDE AIR
P&P	PLAN AND PROFILE
PC	PROPERTY CORNER
PCC	PORTLAND CEMENT CONCRETE
PCWA	PLACER COUNTY WATER AGENCY
PE	POLYETHYLENE OR PERMANENT EASEMENT
PG&E	PACIFIC GAS & ELECTRIC
PIN	TREE: PINE
PL	PROPERTY LINE
PP	POWER POLE
PSI	POUNDS PER SQUARE INCH
PUE	PUBLIC UTILITY EASEMENT
PVC	POLYVINYL CHLORIDE
R	RADIUS
R/W	RIGHT OF WAY
RC	RELATIVE COMPACTION
RED	TREE: REDWOOD OR REDUCER
REINF	REINFORCED OR REINFORCEMENT
RG	RETAINER GLAND
S	SLOPE
S&P	SHELF AND POLE
SD	STORM DRAIN
SF	SQUARE FOOT
SIM	SIMILAR
SPMUD	SOUTH PLACER MUNICIPAL UTILITY DISTRICT
SQ	SQUARE
SS	SANITARY SEWER
SSCO	SANITARY SEWER CLEANOUT
SSMH	SANITARY SEWER MANHOLE
STA	STATION
STD	STANDARD
STL	STEEL
STRUCT	STRUCTURAL OR STRUCTURE
SVC	SERVICE
SW	SIDEWALK
SY	SQUARE YARD
T	TELEPHONE
TOE	TOE OF SLOPE
TOP	TOP OF SLOPE
TBR	TO BE REMOVED
TBC	TOP BACK OF CURB
TBW	TOP BACK OF WALK
THW	TOP OF HEADER WALL
TRW	TOP OF RETAINING WALL
TYP	TYPICAL
UG	UNDERGROUND
USA	UNDERGROUND SERVICE ALERT
UTIL	UTILITY
VB	VALVE BOX
VCP	VITRIFIED CLAY PIPE
VERT	VERTICAL
W	WATER
WAS	WASTE ACTIVATED SLUDGE
WD	WOOD FENCE OR WETLAND
WF	WIRE FENCE
WI	WROUGHT IRON FENCE
WIL	TREE: WILLOW
WM	WATER METER
WSP	WELDED STEEL PIPE
WV	WATER VALVE

LEGEND

EXISTING	NEW	
		- JOINT POLE
		- FOUND MONUMENT (DO NOT DISTURB)
		- GUY WIRE
E		- ELECTRIC MANHOLE
	S	- SANITARY SEWER MANHOLE
SD		- STORM DRAIN MANHOLE
T		- TELEPHONE MANHOLE
		- FENCE GATE POST
		- STORM DRAIN CATCH BASIN
		- MAILBOX
		- STREET NAME SIGN
		- TRAFFIC SIGN
		- STREET LIGHT
		- FIRE HYDRANT
		- WATER METER
		- WATER VALVE
		- CONTROL POINT
B#		- GEOTECHNICAL BORE HOLE
30"OAK#377		- TREE (DIAM)(TYPE)(TAG #) AS ORIGINALLY SURVEYED
X		- TREE REMOVAL PLAN TAG #
		- WETLANDS
		- ABOVE GROUND ROCK
		- ELDERBERRY SHRUB DRIP LINE
		- ABOVE GROUND STRUCTURE
OHW		- OVERHEAD ELECTRIC/TELEPHONE LINE
G		- GAS LINE
IRR		- CONSTRUCTION ACCESS LINE
W		- WATER LINE
SD		- STORM DRAIN LINE
SS		- SANITARY SEWER LINE
		- EXST EASEMENT LINE
RW		- RIGHT-OF-WAY LINE
PL		- PROPERTY LINE
CA		- CONSTRUCTION ACCESS LINE
PE		- NEW PERMANENT EASEMENT
X X X X		- WOOD POST FENCE
XO		- UNDERGROUND ELECTRIC/DATA CABLE
		- SLOPED EMBANKMENT
		- EDGE OF PAVEMENT
		- ABANDONED LINE
		- WROUGHT IRON FENCE
		- DEMOLISH / REMOVE LINE

DISCIPLINE

LETTER	DISCIPLINE
G	GENERAL
C	SITE CIVIL
D	DEMOLITION
CD	CIVIL DETAIL
S	STRUCTURAL
SD	STANDARD DETAILS

NOTES:

1. CONTACT ENGINEER FOR ABBREVIATIONS NOT LISTED.
2. EXISTING PIPING, EQUIPMENT, AND TOPOGRAPHY IS SHOWN SCREENED AND/OR LIGHT-LINED. NEW PIPING, EQUIPMENT, STRUCTURE, AND FINISHED GRADE IS SHOWN HEAVY-LINED.
3. THIS IS A STANDARD LEGEND SHEET. THEREFORE, SOME SYMBOLS OR ABBREVIATIONS MAY APPEAR ON THIS SHEET AND MAY NOT BE UTILIZED ON THIS PROJECT.

STANDARD DETAIL

AS SHOWN ON DRAWING — 12345 — DETAIL NUMBER

AS SHOWN ON STANDARD DETAIL — 12345

NOTES:

1. STANDARD DETAIL CALLOUTS ARE SHOWN TO INDICATE DETAIL REQUIRED AT SPECIFIC LOCATIONS. DETAILS ARE NOT CALLED OUT AT ALL LOCATIONS. WHERE A STANDARD DETAIL CALLOUT IS NOT SHOWN, THE CONTRACTOR SHALL USE THE STANDARD DETAIL MOST APPLICABLE AND CONSISTENT WITH OTHER WORK UNDER THIS CONTRACT.

SECTION

SECTION LETTER — A — M-201 — DRAWING NUMBER (REPLACED WITH A LINE IF TAKEN AND SHOWN ON SAME SHEET)

ON DRAWING WHERE SECTION IS TAKEN: DRAWING NUMBER WHERE SHOWN

A — M-101, M-102 — SECTION — 1/4"= 1'-0"

DRAWING NUMBER (REPLACED WITH A LINE IF TAKEN AND SHOWN ON SAME SHEET)

ON DRAWING WHERE SECTION IS SHOWN: DRAWING NUMBER(S) WHERE TAKEN

DETAIL

DETAIL NUMBER — 1 — M-301 — DRAWING NUMBER (REPLACED WITH A LINE IF TAKEN AND SHOWN ON SAME SHEET)

ON DRAWING WHERE DETAIL IS TAKEN: DRAWING NUMBER WHERE SHOWN

1 — M-101, M-104 — DETAIL — 1"= 1'-0"

DRAWING NUMBER (REPLACED WITH A LINE IF TAKEN AND SHOWN ON SAME SHEET)

ON DRAWING WHERE DETAIL IS SHOWN: DRAWING NUMBER(S) WHERE TAKEN

REGISTERED PROFESSIONAL ENGINEER — MICHAEL P. FISHER — No. C067194 — CIVIL — STATE OF CALIFORNIA

10-8-2019

DESIGN M FISHER | DRAWN T LEWIS | CHECKED M FISHER | APPROVED M FISHER

SOUTH PLACER MUNICIPAL UTILITY DISTRICT — SPMUD — SERVING PLACER COUNTY SINCE 1957

WATERWORKS ENGINEERS — 1322 Blue Oaks Blvd, Suite 300 • Roseville, CA 95678 • 916-790-2888

SOUTH PLACER MUNICIPAL UTILITY DISTRICT
FOOTHILLS TRUNK SEWER REPLACEMENT PROJECT

GENERAL
ABBREVIATIONS & LEGEND

DATE FEBRUARY 2020
PROJECT NUMBER 14-068
DRAWING NUMBER G-3
SHEET NUMBER 3

L:\CAD\PROJECTS\14-068 SPMUD FOOTHILLS TRUNK SEWER_(S)\DRAWINGS\DELIVERABLES\WORKING ALIGNMENTS\FINAL CONTRACT SET\1468D-G-D-CD.DWG

JOB NUMBER: 14-068 FILENAME: 1468D-G-D-CD.DWG PLOT DATE: 21-Feb-20 PLOT TIME: 12:42:54

SPMUD GENERAL NOTES

A. SOUTH PLACER MUNICIPAL UTILITY DISTRICT - SEWER NOTES

1. ALL SANITARY SEWER CONSTRUCTION AND MATERIALS SHALL BE IN ACCORDANCE WITH THE SOUTH PLACER MUNICIPAL UTILITY DISTRICT STANDARD SPECIFICATIONS AND IMPROVEMENT STANDARDS FOR SANITARY SEWERS, LATEST EDITION. THE CONTRACTOR SHALL BE RESPONSIBLE FOR OBTAINING ALL INFORMATION, DRAWINGS AND REQUIREMENTS FROM SPMUD NECESSARY TO COMPLETE THE WORK SHOWN ON THESE PLANS.

2. THE CONTRACTOR SHALL NOTIFY SPMUD PRIOR TO THE START OF SEWER CONSTRUCTION, AND TO ARRANGE FOR A PRE-CONSTRUCTION MEETING. (916)-786-8555.

3. ANY WATER OR DEBRIS ENTERING THE SEWERS TO BE CONSTRUCTED UNDER THESE PLANS SHALL NOT BE DISCHARGED TO THE EXISTING SEWER SYSTEM. PLUGS OF THE MECHANICAL TYPE, OR AS APPROVED BY SPMUD, SHALL BE INSTALLED IN THE MANHOLES AT THE POINTS OF CONNECTION TO THE EXISTING SYSTEM, AND SHALL BE REMOVED ONLY AT THE DIRECTION OF SPMUD. INFLATABLE DEVICES ARE NOT PERMISSIBLE.

4. SEWER MANHOLES SHALL BE VACUUM TESTED FOR LEAKAGE PER SPMUD REQUIREMENTS.

5. THE CONTRACTOR SHALL NOTIFY SPMUD PRIOR TO SCHEDULED AIR TEST, T.V. INSPECTION, AND BALL AND FLUSH. (916)-786-8555. 1

6. CONFINED SPACE ENTRY (SPMUD SEWER MANHOLES): IT IS THE CONTRACTOR'S RESPONSIBILITY AS HOST EMPLOYER TO HAVE A CONFINED SPACE ENTRY PROGRAM IN COMPLIANCE WITH THE REQUIREMENTS OF SECTIONS 5156-5159, OF TITLE 8, GENERAL INDUSTRIAL SAFETY ORDERS, CALIFORNIA CODE OF REGULATIONS. SPMUD'S EXISTING MANHOLES ARE "PERMIT REQUIRED" CONFINED SPACES. THE CONTRACTOR SHALL SUBMIT TO SPMUD THEIR WRITTEN SAFETY PROGRAM (IIPP), SPECIFIC POLICIES FOR CONFINED SPACE ENTRY, AND CONFINED SPACE TRAINING DOCUMENTION FOR REVIEW PRIOR TO THE START OF WORK.

B. SOUTH PLACER MUNICIPAL UTILITY DISTRICT - BY-PASS OPERATIONS NOTES

1. THIS PROJECT WILL NECESSITATE THE BYPASS OF LIVE SEWER LINES. CONTRACTOR SHALL SUBMIT A DETAILED BY-PASS PLAN SEVEN (7) DAYS PRIOR TO CONSTRUCTION TO THE OWNER AND ENGINEER FOR APPROVAL. CONTRACTOR SHALL MAKE PROVISIONS TO ENSURE UNINTERRUPTED SERVICE IN SUCH A FASHION, THAT NO SEWER SHALL SPILL OVER.

2. SPMUD HAS DETERMINED THAT THE BY-PASS OPERATIONS SHALL BE CAPABLE OF 413 GPM PDWF, 1099 GPM PWWF FLOW RATE.

3. SEWAGE MUST BE RETURNED TO THE PIPE AT THE END OF EACH DAY. 24 HRS/7 DAYS BY-PASS OPERATION WILL NOT BE APPROVED. 1

4. A SSMH CAN BE USED AS A WET WELL IF APPROVED BY SPMUD. IT IS AN OPTION THAT THE SUCTION HOSE(S) BE COUPLED TO A FLOW-THROUGH PLUG THAT IS INSERTED INTO THE UPSTREAM PIPE COMING INTO THE SSMH

5. REDUNDANCY - TWO PUMPS, EACH WITH THE CAPABILITY OF HANDLING THE FLOWS, ARE REQUIRED. BY-PASS OPERATIONS SHALL BE DESIGNED IN SUCH A MANNER THAT THE SECONDARY PUMP CAN IMMEDIATELY TAKE THE FLOWS OF THE PRIMARY PUMP IN THE EVENT OF A FAILURE - UNTIL THE PRIMARY PUMP FAILURE IS RESOLVED. THE DISCHARGE AND SUCTION PIPE/HOSE SHALL BE CONNECTED TO THE PUMPS SUCH A MANNER THAT NO SEWAGE IS SPILLED DURING THE TRANSITION FROM THE PRIMARY PUMP TO THE SECONDARY PUMP.

6. THE ENTIRE BY-PASS SYSTEM SHALL BE TESTED DAILY WITH FRESH WATER FOR LEAKAGE, IN THE PRESENCE OF SPMUD INSPECTOR. ANY AND ALL LEAKS SHALL BE CORRECTED PRIOR TO STARTUP OF THE BY-PASS OPERATIONS.

7. BY-PASS OPERATIONS SHALL ACCOMMODATE TRAFFIC FROM THE PUBLIC STREETS AND PRIVATE PROPERTY SUCH AS DRIVEWAY ACCESS AND MUST COMPLY WITH THE LOCAL GOVERNING AGENCY REQUIREMENTS.

8. CONTRACTOR'S BY-PASS PLAN MUST COMPLY WITH ABOVE MINIMUM REQUIREMENTS AND INCLUDE A SIMPLE DETAIL DRAWING SHOWING THE SETUP, PUMP CURVE(S), SIZE/TYPE OF THE HOSES/PIPING AND A NARRATIVE DESCRIBING THE BY-PASS OPERATIONS.

C. PLACER COUNTY GENERAL NOTES

1. CONTRACTOR SHALL COMPLY WITH ALL REQUIREMENTS OF COUNTY OF PLACER ENCROACHMENT PERMIT.

2. SUBMIT A TRAFFIC CONTROL PLAN FOURTEEN (14) DAYS PRIOR TO START OF CONSTRUCTION FOR REVIEW AND APPROVAL TO SPMUD, PLACER COUNTY DPW AND ENGINEER. THE TRAFFIC CONTROL PLAN SHALL INCLUDE DETAILS ABOUT HAUL ROUTES FOR MATERIALS AND EQUIPMENT. ALL TRAVEL LANES MUST BE AVAILABLE WHEN CONSTRUCTION IS NOT ACTIVELY PROCEEDING.

3. MAINTAIN A MINIMUM OF 50 FEET SETBACK FROM ANY EXISTING WELLS LOCATED ON PARCELS ALONG THE ALIGNMENT.

D. SPMUD - ENVIRONMENTAL NOTES

1. IF, DURING CONSTRUCTION, CULTURAL MATERIALS ARE DISCOVERED, INCLUDING BUT NOT LIMITED TO PREHISTORIC ARTIFACTS SUCH AS FLAKED STONE, GROUNDSTONE, DIETARY FAUNAL BONE OR SHELL, AND/OR BONE OR SHELL TOOLS OR ORNAMENTS SUCH AS AWLS OR BEADS; HISTORICAL ARTIFICATS SUCH AS GLASS, CERAMICS, CANS, OTHER METAL, WOOD, BRICKS, AND/OR STRUCTURAL REMAINS, THE CONTRACTOR SHALL IMMEDIATELY NOTIFY THE SOUTH PLACER MUNICIPAL UTILITY DISTRICT AND PROJECT ARCHAEOLOGIST. IF, DURING CONSTRUCTION, HUMAN REMAINS ARE UNCOVERED THE CONTRACTOR SHALL IMMEDIATELY NOTIFY THE SOUTH PLACER MUNICIPAL UTILITY DISTRICT, PROJECT ARCHAEOLOGIST, AND CITY OF ROCKLIN. ALL SOIL-DISTURBING WORK SHALL BE HALTED WITHIN 100 FEET OF THE DISCOVERY, AT WHICH POINT, THE PROJECT ARCHAEOLOGIST SHALL IMPLEMENT THE HISTORIC PROPERTIES TREATMENT PLAN (HPTP) WHICH HAS BEEN DEVELOPED BY SOUTH PLACER MUNICIPAL UTILITY DISTRICT FOR THIS SPECIFIC PROJECT.

CITY OF ROCKLIN GENERAL NOTES

CITY OF ROCKLIN - GENERAL NOTES 1

1. CONTRACTOR SHALL ASSUME SOLE AND COMPLETE RESPONSIBILITY FOR CONSTRUCTION OF THIS PROJECT, INCLUDING SAFETY OF ALL PERSONS AND PROPERTY. THIS REQUIREMENT SHALL APPLY CONTINUOUSLY AND NOT BE LIMITED TO NORMAL WORKING HOURS. THE CONTRACTOR SHALL DEFEND, INDEMNIFY AND HOLD THE CITY, OWNER AND THE ENGINEER HARMLESS FROM ANY AND ALL LIABILITY, REAL OR ALLEGED IN CONNECTION WITH THE PERFORMANCE OF WORK ON THIS PROJECT, EXCEPTING FOR LIABILITY ARISING FROM THE SOLE NEGLIGENCE OF THE CITY, OWNER OR ENGINEER.

2. ALL MATERIALS, METHODS, AND WORKMANSHIP SHALL CONFORM TO THE SPECIFICATION OF THE AGENCIES INVOLVED AND ALL WORK IS SUBJECT THE APPROVAL OF THEIR DIRECTOR OR AUTHORIZED REPRESENTATIVE.

6. THE CONTRACTOR SHALL NOTIFY THE CITY OF ROCKLIN PUBLIC SERVICES INSPECTORS MON.-FRI. 8:00 A.M. TO 4:00 P.M. AT (916) 625-5500 FOR A PRE-CONSTRUCTION MEETING 48 HOURS IN ADVANCE OF STARTING ANY CONSTRUCTION ACTIVITIES. PLACER COUNTY WATER AGENCY AND SPMUD REQUIRE AT LEAST 48-HOURS PRIOR TO ANY CONSTRUCTION REQUESTS FOR INSPECTION OF PUBLIC FACILITIES. THEREFORE NOTICE SHALL BE GIVEN 48-HOURS IN ADVANCE AND BE PERFORMED BY THE AGENCY'S DESIGNATED AGENT.

7. THE CONTRACTOR SHALL OBTAIN ALL NECESSARY ENCROACHMENT PERMITS AND SHALL POSSESS APPROVED PLANS PRIOR TO BEGINNING OF CONSTRUCTION. A SET OF SIGNED AND APPROVED PLANS ARE TO BE ON THE JOB SITE AT ALL TIMES.

8. THE CONTRACTOR SHALL MAINTAIN THE EXISTING PUBLIC AND PRIVATE IMPROVEMENT WITHIN THE WORK AREA AND SHALL ADEQUATELY BARRICADE THE PROJECT SITE TO KEEP THE GENERAL PUBLIC FROM THE SITE. ANY IMPROVEMENTS DAMAGED DURING CONSTRUCTION SHALL BE REPLACED BY CONTRACTOR.

10. THE CONTRACTOR SHALL AT ALL TIMES COORDINATE WORK WITH THAT OF OTHERS ON THE SITE. THE CONTRACTOR SHALL HAVE A RESPONSIBLE PARTY, WHO SHALL HAVE THE AUTHORITY TO REPRESENT AND ACT FOR THE CONTRACTOR ON THE JOB SITE DURING ALL WORKING HOURS.

13. CONTRACTOR SHALL BE RESPONSIBLE FOR THE PROTECTION OF ALL EXISTING MONUMENTS AND/OR OTHER SURVEY MONUMENTS AND SHALL NOTIFY CITY OF ROCKLIN DEPARTMENT OF PUBLIC SERVICES OF ANY DAMAGED OR REMOVED CITY, STATE, OR BUREAU MONUMENTS. CONTRACTOR SHALL BE RESPONSIBLE TO RESTORE ANY DAMAGED OR REMOVED MONUMENTS.

14. CONTRACTOR SHALL NOTIFY DEPARTMENT OF PUBLIC SERVICES UPON APPLICATION FOR PERMIT AND PAYMENT OF REQUIRED FEE.

16. FLOODPLAIN BOUNDARIES SHALL BE CLEARLY DELINEATED IN THE FIELD WITH ORANGE ESA FENCING AND SIX FOOT (6') STAKES TEN FEET (10') OC PRIOR TO CONSTRUCTION.

17. CONTRACTOR SHALL BE RESPONSIBLE FOR CONDUCTING HIS OPERATION ENTIRELY OUTSIDE OF ANY "NO GRADING AREA." THESE AREAS SHALL BE CLEARLY DELINEATED IN THE FIELD PRIOR TO CONSTRUCTION.

18. WHEREVER WORK IS BEING DONE, IN AN OFFSITE EASEMENT THE CONTRACTOR SHALL NOTIFY THE PROPERTY OWNER 48 HOURS PRIOR TO COMMENCING WORK.

STREETS

1) ALL UTILITY TRENCHING TO BE DONE AS PER TRENCH DETAILS.

2) THE CONTRACTOR SHALL COORDINATE WITH ALL OTHER WORK TO ASSURE THAT ALL UNDERGROUND CONDUITS AND UTILITIES ARE INSTALLED PRIOR TO PAVING. ALL PIPE IN PAVED AREAS SHALL BE PLACED PRIOR TO PLACING AGGREGATE BASE. NO CURB, GUTTER, SIDEWALK FOR AGGREGATE BASE SHALL BE PLACED UNTIL ALL UNDERGROUND UTILITIES ARE INSTALLED, TESTED AND APPROVED BY THE AGENCY.

3) EXISTING A.C. SURFACE SHALL BE CUT TO A NEAT STRAIGHT LINE PARALLEL WITH THE STREET CENTERLINE AND THE EXPOSED EDGE AND VERTICAL EDGE OF GUTTER LIP SHALL BE TACKED WITH EMULSION PRIOR TO PAVING . THE CONTRACTOR SHALL PREVENT SAW CUT MATERIAL FROM ENTERING DRAINAGE STRUCTURES, WATERWAYS, DRAINAGE SWALES, ETC. MATERIAL SHALL BE GRADED, RE-COMPACTED, AND RESEALED PRIOR TO PAVING. ANY CONCRETE, A.C., TREES, FENCES, AND/OR OTHER OBSTRUCTIONS REQUIRED TO CONSTRUCT THE IMPROVEMENT SHALL BE REMOVED PRIOR TO PAVING.

4) TRAFFIC CONTROL PROCEDURES SHALL CONFORM TO THE MOST RECENT EDITION OF THE MUTCD. THE CONTRACTOR SHALL OBTAIN APPROVAL FROM THE CITY OF ROCKLIN FOR THE METHOD OF TRAFFIC CONTROL PRIOR TO STARTING CONSTRUCTION.

5) THE CONTRACTOR WILL BE RESPONSIBLE FOR ANY DAMAGE TO THE STREETS OR SIDEWALKS DURING THE CONSTRUCTION PHASE. IF THE CITY FINDS A SIGNIFICANT AMOUNT OF STREET DAMAGE, AN OVERLAY OF THE ENTIRE PROJECT OR STREET IN QUESTION WILL BE REQUIRED TO PAVE BEFORE A NOTICE OF COMPLETION IS PROCESSED. THE CONTRACTOR IS TOTALLY RESPONSIBLE FOR THE QUALITY OF WORKMANSHIP ON THE PROJECT.

6) ALL EXISTING PAVEMENT MARKINGS TO BE REMOVED, SHALL BE REMOVED BY GRINDING, AND A SURFACE TREATMENT MAY BE REQUIRED BY THE CITY.

7) ALL PAVEMENT MARKINGS SHALL BE THERMOPLASTIC AND ARE TO CONFORM TO THE MOST RECENT EDITION OF THE CALTRANS STANDARD SPECIFICATIONS AND PLANS.

8) THE CONTRACTOR IS RESPONSIBLE FOR THE PROTECTION OF ALL MONUMENTS AND OTHER SURVEY MARKERS.

9) ALL SURVEY MONUMENTS SHALL BE SET IN ACCORDANCE WITH THE CITY OF ROCKLIN SUBDIVISION ORDINANCE PRIOR TO FINAL INSPECTION AND ACCEPTANCE OF PUBLIC IMPROVEMENTS. MONUMENT BOXES SHALL BE "IRONSIDES" 1B-BODY WITH IL-LID MARKED "MONUMENT" OR APPROVED EQUAL.

EARTHWORK AND GRADING:

1) THE CONTRACTOR SHALL CONTACT THE CITY OF ROCKLIN PUBLIC SERVICES, 48 HOURS PRIOR TO THE START OF EARTHWORK AND GRADING CONSTRUCTION.

2) GRADING SHALL NOT OCCUR ON THE PROJECT AREA UNTIL ALL EXISTING UTILITIES AND TREES AND SENSITIVE AREAS TO BE SAVED ARE ADEQUATELY PROTECTED PER SS-2.09 OF THE CITY ROCKLIN STANDARDS

3) ALL COMPACTION TESTING SHALL BE PERFORMED BY THE CITY OR IT'S DESIGNATED AGENT AND BE PAID FOR BY THE CITY (OR CONTRACTOR IN CASE OF RETESTING). TESTS WITHIN THE RIGHT-OF-WAY SHALL BE APPROVED BY THE CITY OF ROCKLIN AND ALL TESTS OUTSIDE THE RIGHT-OF-WAY SHALL BE CERTIFIED BY THE SOILS ENGINEER FOR THE PROJECT.

4) ALL UNSUITABLE AND SURPLUS MATERIAL SHALL BECOME THE PROPERTY OF THE CONTRACTOR AND SHALL BE REMOVED FROM THE SITE UNLESS THE ENGINEER SPECIFIES OTHERWISE. UTILITY TRENCHING TO BE COMPLETED WITH FINAL EARTHWORK.

5) CONTRACTOR SHALL APPLY EROSION CONTROL HYDROSEEDING TO ALL GRADED OR DISTURBED SOILS WITHIN THE WORK AREA AFTER COMPLETION OF IMPROVEMENTS OR AS SOON AS PRACTICAL AFTER GRADING TO REDUCE DUST AND EROSION POTENTIAL. STRAW OR HYDROMULCHING SHALL BE COMBINED WITH THE SEEDING ON SLOPES EQUAL TO OR GREATER THAN 10:1 AND PLACED PRIOR TO COMPLETION OF PROJECT IF DEEMED NECESSARY FOR CONTROLLING SOIL EROSION. THE CONTRACTOR SHALL COMPLY WITH THE APPROVED SWPPP.

AIR QUALITY, DUST CONTROL, & NOISE

1) PRIOR TO ANY GRADING OR CONSTRUCTION ACTIVITY, A DUST CONTROL PLAN SHALL BE SUBMITTED FOR APPROVAL BY THE CITY ENGINEER AND THE PLACER COUNTY AIR POLLUTION CONTROL DISTRICT. THE DUST CONTROL PLAN SHALL SPECIFY MEASURES TO REDUCE DUST POLLUTION DURING ALL PHASES OF CONSTRUCTION.

2) THE CONTRACTOR SHALL AT ALL TIMES CONFORM TO THE RECOMMENDATIONS FROM THE CITY OF ROCKLIN ON DUST CONTROL, AND ANY REQUIREMENTS OF PLACER COUNTY AIR POLLUTION CONTROL DISTRICT. AREAS SURROUNDING THE WORK SHALL BE KEPT CLEAN AND RETURNED TO ORIGINAL CONDITION UPON COMPLETION OF CONTRACT. GRADING SHALL NOT OCCUR WHEN WIND SPEED EXCEEDS 10 MPH CONTINUOUSLY FOR MORE THAN 1 HOUR.

3) THOSE ENGAGED IN CONSTRUCTION ACTIVITY SHALL COMPLY WITH THE CITY OF ROCKLIN CONSTRUCTION NOISE COMPATIBILITY GUIDELINES, INCLUDING RESTRICTING CONSTRUCTION NOISE GENERATING ACTIVITIES WITHIN OR NEAR RESIDENTIAL AREAS TO BETWEEN 7:00 AM AND 5:00 PM ON WEEKDAYS AND 8:00 AM AND 4:00 PM ON THE WEEKENDS TO THE SATISFACTION OF THE PUBLIC SERVICES DIRECTOR OR BUILDING OFFICIAL.

NO.	DATE	REVISION	BY	APV'D
1	02/13/20	ADDENDUM REVISIONS IN CONFORMED SET	DL	TL

DESIGN M FISHER
DRAWN T LEWIS
CHECKED M FISHER
APPROVED M FISHER

SPMUD SOUTH PLACER MUNICIPAL UTILITY DISTRICT

WATERWORKS ENGINEERS
1322 Blue Oaks Blvd. Suite 300 • Roseville, CA 95678 • 916-790-2888

SOUTH PLACER MUNICIPAL UTILITY DISTRICT
FOOTHILLS TRUNK SEWER REPLACEMENT PROJECT

GENERAL
GENERAL NOTES

REGISTERED PROFESSIONAL ENGINEER MICHAEL FISHER No. C067194 CIVIL STATE OF CALIFORNIA
10-8-2019

DATE FEBRUARY 2020
PROJECT NUMBER 14-068
DRAWING NUMBER G-4
SHEET NUMBER 4

L:\CAD\PROJECTS\14-068 SPMUD FOOTHILLS TRUNK SEWER_(S)\DRAWINGS\DELIVERABLES\WORKING ALIGNMENTS\FINAL CONTRACT SET\1468D-G-D-CD.DWG

JOB NUMBER: 14-068 FILENAME: 1468D-G-D-CD.DWG PLOT DATE: 19-Feb-20 PLOT TIME: 15:09:40

WWE GENERAL NOTES

1. ALL WORK SHALL COMPLY WITH APPLICABLE STATE, FEDERAL, AND LOCAL CODES, AND ALL NECESSARY LICENSES AND PERMITS SHALL BE OBTAINED BY THE CONTRACTOR AT ITS EXPENSE, UNLESS OTHERWISE SPECIFIED IN THE CONTRACT DOCUMENTS.

2. DEVIATION FROM THESE PLANS WITHOUT THE PRIOR WRITTEN CONSENT OF THE ENGINEER MAY BE CAUSE FOR THE WORK TO BE UNACCEPTABLE.

3. ALL CONSTRUCTION SHALL CONFORM TO THE SOUTH PLACER MUNICIPAL UTILITY DISTRICT (SPMUD) STANDARD SPECIFICATIONS AND THE CONTRACT DOCUMENTS. ORDER OF PRECEDENCE OF CONTRACT DOCUMENTS SHALL BE PER THE CALTRANS STANDARD SPECIFICATIONS. ORDER OF PRECEDENCE AMONG THE CONTRACT DOCUMENTS IS FURTHER DEFINED AS FOLLOWS:

   a. CONTRACT/AGREEMENT
   b. BID/PROPOSAL
   c. PERMITS
   d. SPECIAL PROVISIONS
   e. GENERAL CONDITIONS & SUPPLEMENTARY CONDITIONS
   f. CONTRACT SPECIFICATIONS (TECHNICAL SPECIFICATIONS)
   g. CONTRACT DRAWINGS (DRAWING PLANS)
   h. SOUTH PLACER MUNICIPAL UTILITY DISTRICT SANITARY SEWER CONSTRUCTION STANDARDS
   i. FIELD INSTRUCTIONS OR OTHER WRITTEN DIRECTIVES
   j. CALTRANS 2010 STANDARD SPECIFICATIONS

4. CONTRACTOR SHALL COORDINATE ALL WORK WITH PLACER COUNTY (COUNTY) AND CITY OF ROCKLIN (CITY) WHEN WORKING WITHIN THEIR JURISDICTION.

5. ALL PIPE LENGTHS AND DISTANCES BETWEEN STRUCTURES ARE MEASURED FROM CENTER OF STRUCTURE TO CENTER OF STRUCTURE ALONG A HORIZONTAL PLANE.

6. ELEVATIONS FOR THE PROPOSED PIPELINE ARE TO THE INVERT OF THE PIPE.

7. MINOR CHANGES IN THE HORIZONTAL AND VERTICAL ALIGNMENT OF THE SEWER MAIN MAY BE PROPOSED BY THE CONTRACTOR AND SUBMITTED TO THE ENGINEER FOR APPROVAL TO FACILITATE CONSTRUCTION AND AVOID FIELD CONFLICTS.

8. INFORMATION ON VERTICAL DATUM, HORIZONTAL DATUM, AND THE BENCHMARK DATA IS LISTED IN SHEET G-6.

9. THE CONTRACTOR SHALL BE RESPONSIBLE FOR THE PROTECTION OF ALL EXISTING SURVEY MONUMENTS OR MARKERS DURING CONSTRUCTION.

1

10. LOCATIONS OF EXISTING SHOWN UTILITIES ARE APPROXIMATE. IT IS THE RESPONSIBILITY OF THE CONTRACTOR TO DETERMINE THE SIZE, DEPTH, ORIENTATION, MATERIAL AND LOCATION OF ALL EXISTING UNDERGROUND UTILITIES PRIOR TO CONSTRUCTION AND SUBMIT THIS INFORMATION TO THE ENGINEER. THE CONTRACTOR SHALL TAKE WHATEVER STEPS ARE NECESSARY TO PROVIDE FOR THE PROTECTION OF EXISTING UTILITIES. THE ENGINEER HAS ATTEMPTED TO LOCATE AND INDICATE ALL EXISTING FACILITIES ON THE PLANS; HOWEVER, THIS INFORMATION IS SHOWN FOR THE CONTRACTOR'S CONVENIENCE ONLY. THE ENGINEER OR SPMUD ASSUMES NO RESPONSIBILITY FOR THE LOCATIONS OF UTILITIES SHOWN OR NOT SHOWN. PRIOR TO DIGGING ON AND OFF SITE, CONTRACTOR SHALL HAVE ALL UTILITIES LOCATED BY CALLING "UNDERGROUND SERVICE ALERT" ("USA") 1-800-227-2600 TWO (2) DAYS MINIMUM TO FOURTEEN (14) DAYS MAXIMUM BEFORE BEGINNING ANY EXCAVATION. THE CONTRACTOR SHALL CONTACT ANY UTILITY COMPANY WHOSE UTILITIES ARE NOT LOCATED BY "USA" FOR EXACT LOCATION OF THEIR UTILITIES PRIOR TO STARTING CONSTRUCTION. ANY PROPERY MARKED UTILITY THAT IS DAMAGED OR IMPACTED AS A RESULT OF CONTRACTOR'S MEANS AND METHODS OF CONSTRUCTION SHALL BE THE SOLE RESPONSIBILITY OF THE CONTRACTOR TO REPAIR, REPLACE AND/OR RELOCATE TO PRECONSTRUCTION OR BETTER CONDITIONS AT CONTRACTOR'S EXPENSE. THE CONTRACTOR SHALL COORDINATE WORK WITH CONFLICTING UTILITIES AND PROVIDE FOR REMOVAL, RELOCATION AND REPLACEMENT AS NECESSARY FOR INSTALLATION OF THE PROPOSED SEWER. UTILITY COORDINATION SHALL BE INCLUDED IN THE PROJECT SCHEDULE AND IT IS THE EXPLICIT RESPONSIBILITY OF THE CONTRACTOR TO ASSURE THAT THE PROJECT SCHEDULE INCLUDES THE NECESSARY RELOCATION. UNDERGROUND FACILITIES, INCLUDING UTILITIES NOW SHOWN ON PLANS, SHALL BE ADDRESSED AS DESCRIBED IN CONTRACT DOCUMENTS, SECTION 700 - GENERAL CONDITIONS, 4.04 -UNDERGROUND FACILITIES, PARAGRAPH B - NOT SHOWN OR INDICATED.

11. BURIED TELEPHONE,GAS AND CATV CABLES (FIBER OPTICS AND CONVENTIONAL) ARE KNOWN TO VARY IN DEPTH AND LOCATION DUE TO INSTALLATION TECHNIQUES. THE CONTRACTOR SHALL BE FULLY RESPONSIBLE FOR COORDINATING WITH THE UTILITY COMPANY TO DETERMINE SPECIFIC CABLE LOCATIONS AND NOTIFYING THE ENGINEER OF THE EXACT ELEVATION OF THE CABLES. THE CONTRACTOR SHALL BE RESPONSIBLE FOR ALL COSTS ASSOCIATED WITH LOCATING, COORDINATION FOR RELOCATION OR REPAIRING OF BURIED CABLES AND GAS ALONG THE PIPELINE ALIGNMENT.

12. EXISTING OVERHEAD ELECTRIC AND TELEPHONE TRANSMISSION LINES MAY BE IN THE PROJECT AREA THAT ARE NOT SHOWN ON DRAWINGS. EXTREME CAUTION SHALL BE USED WHEN WORKING IN THE VICINITY OF OVERHEAD UTILITIES SO AS TO PREVENT INJURY TO WORKERS OR DAMAGE TO THE UTILITIES.

13. THE CONTRACTOR SHALL NOTIFY THE ENGINEER IMMEDIATELY SHOULD ANY FIELD CONDITIONS BE ENCOUNTERED THAT VARY FROM THE INFORMATION PROVIDED IN THE CONTRACT DOCUMENTS.

14. THE CONTRACTOR SHALL NOTIFY PACIFIC GAS & ELECTRIC (PG&E) PRIOR TO EXCAVATING CLOSER THAN FIVE FEET TO AN EXISTING UTILITY POLE. THE CONTRACTOR SHALL BE RESPONSIBLE FOR COORDINATING ANY ADDITIONAL SUPPORT OF EXISTING POWER POLES AS REQUIRED FOR TRENCH EXCAVATION. ALL COSTS OF SUCH WORK SHALL BE PAID BY THE CONTRACTOR.

15. THE CONTRACTOR SHALL INSTALL ALL TEMPORARY AND PERMANENT SIGNS AS REQUIRED BY CITY AND COUNTY ALONG ROADWAYS AND ALONG STREETS, IN ACCORDANCE WITH THE APPROVED TRAFFIC CONTROL PLAN.

16. UNLESS OTHERWISE INDICATED, ALL EXISTING GRADE ELEVATIONS SHOWN ARE ALONG THE CENTER LINE OF THE SEWER ALIGNMENT.

17. MINIMUM PIPE COVER FOR SANITARY SEWER SHALL BE 3 FEET UNLESS LESS COVER IS SPECIFICALLY APPROVED BY THE ENGINEER OR SHOWN ON PLANS.

18. LIMITS OF PAVEMENT REMOVAL AND RECONSTRUCTION SHALL BE IN ACCORDANCE WITH THE CITY STANDARDS AND AS MODIFIED HEREIN. THE ASPHALT CONCRETE ALONG THE EDGES OF THE TRENCH SHALL BE SAWCUT AND REMOVED TO A STRAIGHT LINE PRIOR TO FINAL PAVING. EXPOSED VERTICAL EDGES WHICH WILL HAVE ASPHALT CONCRETE AGAINST THEM SHALL BE TACKED WITH EMULSION PRIOR TO PLACEMENT OF ASPHALT CONCRETE. IN NO CASE SHALL THE THICKNESS OF THE NEW PAVEMENT SECTION BE LESS THAN THAT OF THE EXISTING PAVEMENT.

19. TRAFFIC ISLANDS, CURBS, CONCRETE DRIVEWAYS AND SIDEWALKS SHALL BE REPLACED TO THE FIRST EXPANSION JOINT BEYOND THE TRENCH EXCAVATION LIMITS AND TO THE FULL WIDTH. TRAFFIC ISLANDS, CURBS AND CONCRETE DRIVEWAYS SHALL MATCH EXISTING. THE CONTRACTOR SHALL BE RESPONSIBLE FOR REPLACING ANY TRAFFIC ISLANDS, CURBS, CONCRETE DRIVEWAYS AND SIDEWALKS DAMAGED OR DEEMED HAZARDOUS BY THE PROJECT INSPECTOR AS A RESULT OF EXECUTION OF PROJECT WORK.

20. STRIPING, MARKINGS, ETC. DAMAGED DURING CONSTRUCTION SHALL BE REPLACED BY THE CONTRACTOR AT NO ADDITIONAL COST TO THE CITY OR SPMUD PRIOR TO COMPLETION OF PROJECT.

21. THE CONTRACTOR SHALL REMOVE AND REINSTALL ALL EXISTING FENCE AS REQUIRED FOR PIPE INSTALLATION. ANY ADDITIONAL FENCE MATERIALS REQUIRED SHALL BE PROVIDED BY THE CONTRACTOR AT NO ADDITIONAL COST TO THE PRIVATE PROPERTY OWNERS OR SPMUD. REPLACED FENCE SHALL MATCH EXISTING FENCE TYPE, UNLESS OTHERWISE SHOWN ON PLANS.

22. CARE SHALL BE TAKEN TO PROTECT EXISTING PLANTS, SHRUBS, TREES, LAWN, LANDSCAPE AREAS AND IRRIGATION SYSTEMS. ANY ITEMS REMOVED OR DAMAGED SHALL BE REPLACED. ALL ITEMS WHICH REQUIRE REMOVAL OR ARE DAMAGED BY THE CONTRACTOR'S OPERATION SHALL BE REPLACED TO ORIGINAL CONDITION AND TO THE APPROVAL OF THE ENGINEER.

23. PRIOR TO CONSTRUCTION, CONTRACTOR SHALL DEVELOP AND SUBMIT TO THE ENGINEER A SHORING PLAN. THE CONTRACTOR SHALL FURNISH AND INSTALL ALL SHEETING, SHORING AND BRACING REQUIRED FOR THE INSTALLATION OF THE UTILITY, ALL EXCAVATIONS SHALL BE KEPT WITHIN THE DESIGNATED EASEMENT WIDTHS. EXCAVATION WITHIN PAVED AREAS SHALL BE KEPT TO A MINIMUM. SHEETING SHALL BE INSTALLED AS REQUIRED TO PROTECT EXISTING UTILITIES.

24. PRIOR TO CONSTRUCTION, THE CONTRACTOR SHALL DEVELOP AND SUBMIT TO THE ENGINEER, A TRAFFIC CONTROL PLAN. THE CONTRACTOR SHALL COMPLY WITH THE APPROVED TRAFFIC CONTROL PLAN AT ALL TIMES. THE CONTRACTOR SHALL BE SOLELY AND COMPLETELY RESPONSIBLE FOR FURNISHING, INSTALLING AND MAINTAINING ALL WARNING SIGNS AND DEVICES NECESSARY TO SAFEGUARD THE GENERAL PUBLIC AND THE WORK, AND TO PROVIDE FOR THE PROPER AND CONTINUOUS SAFE ROUTING OF VEHICULAR AND PEDESTRIAN TRAFFIC DURING THE PERFORMANCE OF THE WORK. THIS REQUIREMENT SHALL APPLY CONTINUOUSLY AND NOT BE LIMITED TO WORKING HOURS. THE USE OF FLAGGERS, BARRICADES AND CONSTRUCTION SIGNING SHALL COMPLY WITH THE CALIFORNIA MANUAL ON UNIFORM TRAFFIC CONTROL DEVICES (CMUTCD), LATEST EDITION.

25. ADVISORY SIGNS SHALL BE POSTED 10 DAYS IN ADVANCE OF CONSTRUCTION ACTIVITIES.

26. ALL NON-APPLICABLE SIGNS SHALL BE COVERED WITH BLACK PLASTIC OR REMOVED.

27. ALL MATERIAL CLEARED AND GRUBBED BY THE CONTRACTOR IN ORDER TO CONSTRUCT THE WORK, SUCH AS TREES, VEGETATION, FENCING, ETC., SHALL BECOME THE PROPERTY OF THE CONTRACTOR AND SHALL BE PROPERLY DISPOSED OF OFF-SITE AT AN APPROVED DISPOSAL SITE.

28. THE CONTRACTOR SHALL MAINTAIN A MEANS FOR INGRESS/EGRESS TO EACH PROPERTY AT ALL TIMES

29. THE CONTRACTOR SHALL PROVIDE ALL CONSTRUCTION SURVEYING. ANY EXISTING SURVEY STAKES SHALL NOT BE USED BY THE CONTRACTOR.

30. THE CONTRACTOR SHALL NOTIFY HOME OWNERS WITHIN 1000' OF CONSTRUCTION AT LEAST 14 CALENDAR DAYS PRIOR TO CONSTRUCTION THAT CONSTRUCTION ACTIVITY WILL TAKE PLACE IN THEIR AREA. THIS AND ALL OTHER NOTIFICATIONS SHALL BE MADE PER THE SPECIAL PROVISIONS.

31. THE CONTRACTOR SHALL REMOVE AND REPLACE ALL CONFLICTING MAIL BOXES AND STRUCTURES WITHIN THE RIGHT OF WAY. THE CONTRACTOR SHALL MAINTAIN ACCESS TO EXISTING MAILBOXES OR PROVIDE ALTERNATE TEMPORARY MAILBOXES APPROVED BY THE U.S. POSTAL SERVICE.

32. THE CONTRACTOR SHALL CORE DRILL ALL EXISTING MANHOLES FOR CONNECTION OF PROPOSED SEWERS. THE CONTRACTOR SHALL LEAVE A MINIMUM OF 12 INCHES OF MANHOLE WALL UNDISTURBED AS MEASURED FROM THE INTERIOR OF THE STRUCTURE BETWEEN CORING FOR PIPE TIE-INS. IF THIS CANNOT BE ACCOMPLISHED, A LARGER MANHOLE SHALL BE INSTALLED. PIPE CONNECTIONS SHALL BE MADE IN ACCORDANCE WITH PLANS AND TECHNICAL SPECIFICATIONS.

33. ALL SLOPES SHALL BE 1.5:1 OR FLATTER, UNLESS OTHERWISE SHOWN OR RECOMMENDED IN THE GEOTECHNICAL REPORT.

34. THE EXISTING VEGETATION OUTSIDE OF THE CONSTRUCTION ACCESS (CA) LIMITS OR TCE TO REMAIN SHALL BE PROTECTED FROM DAMAGE. THE CONTRACTOR SHALL INSTALL A 4 FOOT HIGH ORANGE BARRIER FENCE ALONG THE CLEARING LIMITS PRIOR TO CLEARING THE SITE.

35. ALL CONSTRUCTION ACTIVITY SHALL BE LIMITED TO STREET RIGHTS-OF-WAY, SPMUD OBTAINED EASEMENTS, AND THE CONSTRUCTION LIMITS AS SHOWN ON PLANS.

36. THE CONTRACTOR SHALL RESTORE ALL ACCESS ROADS AND STREETS WITHIN THE CONSTRUCTION LIMITS TO PRE-CONSTRUCTION CONDITIONS.

37. LANE AND SHOULDER CLOSURES ON ANY ROAD SHALL BE IN ACCORDANCE WITH THE APPROVED TRAFFIC CONTROL PLAN.

38. ALL TRENCHING AND BACK FILLING SHALL BE IN ACCORDANCE WITH CITY STANDARDS AND AS MODIFIED IN THE CONSTRUCTION DETAILS ELSEWHERE IN THE PLANS AND TECHNICAL SPECIFICATIONS. TRENCH BACKFILL SHALL BE MECHANICALLY COMPACTED. TRENCHES SHALL BE CLOSED OR COVERED AT THE END OF THE WORK DAY.

39. FOR ALL TRENCHING EXCAVATIONS 5 FEET OR MORE IN DEPTH, THE CONTRACTOR SHALL OBTAIN A PERMIT FROM THE DEPARTMENT OF INDUSTRIAL RELATIONS, DIVISION OF OCCUAPATIONAL SAFTEY AND HEALTH (Calosha) PRIOR TO BEGINNING ANY EXCAVATION. A COPY OF THIS PERMIT SHALL BE AVAILABLE AT THE CONSTRUCTION SITE AT ALL TIMES.

40. THE CONTRACTOR SHALL PERMANENTLY PATCH PAVEMENT FOR ALL PARALLEL PAVEMENT DISTURBANCES BY THE END OF EACH WEEK. TEMPORARY PLATING WITH STEEL PLATES OR APPROVED EQUAL PATCHES SHALL BE PROVIDED DAILY AND MAINTAINED UNTIL THE PAVEMENT PATCH IS PROVIDED.

41. THE CONTRACTOR SHALL BE REQUIRED TO RECONNECT ALL ACTIVE CONNECTIONS SHOWN ON THE PLANS AND SHALL NOTIFY THE ENGINEER IMMEDIATELY IF ACTIVE TAPS THAT ARE NOT SHOWN ON THE PLANS ARE IDENTIFIED.

42. THE CONTRACTOR SHALL ONLY ACCESS THE CONSTRUCTION AREAS VIA ROUTES DESIGNATED AS "CONSTRUCTION ACCESS" ON THE PLANS. ACCESS TO CONSTRUCTION AREAS VIA ALTERNATE ROUTES IS PROHIBITED, UNLESS CONTRACTOR RECEIVES APPROVAL FROM ENGINEER.

43. THE CONTRACTOR SHALL CONDUCT ALL WORK WITHIN THE AREAS DESIGNATED AS "CONSTRUCTION ACCESS (CA) LIMITS OR "TCE" ON THE PLANS.

44. CONTRACTOR MUST ACCESS WORK AREAS THROUGH PUBLICLY OWNED RIGHT-OF-WAY (R/W) OR THROUGH ACCESS POINTS DELINEATED ON THE PLANS WHERE PUBLIC RIGHT-OF-WAY IS NOT AVAILABLE.

45. PRIOR TO ACCEPTANCE OF THE SEWER, THE PIPELINES SHALL BE PROPERLY CLEANED OF ALL DEBRIS, AIR TESTED, MANDRELLED WHEN APPLICABLE AND TELEVISED. PROPER CLEANING TECHNIQUES AND DEVICES SHALL BE UTILIZED TO INSURE NO DEBRIS, SAND, GRAVEL OR SILT WILL ENTER THE EXISTING SEWER SYSTEM.

46. THE DOWNSTREAM END OF ALL NEW PIPELINES SHALL BE PLUGGED UNTIL THE SEWER IS ACCEPTED BY SPMUD.

47. THE CONTRACTOR SHALL VERIFY ALL DIMENSIONS PRIOR TO STARTING CONSTRUCTION. THE ENGINEER SHALL BE NOTIFIED OF ANY DISCREPANCIES OR INCONSISTENCIES.

48. STRUCTURES NOTED IN THE PLANS AS EXISTING SHALL BE FIELD VERIFIED BY THE CONTRACTOR AND ANY DISCREPANCIES NOTED SHALL BE REPORTED TO THE ENGINEER.

49. TYPICAL DETAILS AND SCHEDULES INDICATED MAY NOT BE SPECIFICALLY REFERENCED ON THE PLANS. THE CONTRACTOR IS RESPONSIBLE TO DETERMINE WHERE EACH TYPICAL DETAIL OR SCHEDULE APPLIES. IF LOCATIONS ARE FOUND WHERE NO TYPICAL DETAIL, TYPICAL SCHEDULE, OR SPECIFIC DETAIL APPLIES, THE ENGINEER SHALL BE NOTIFIED.

50. OBSERVATION VISITS (SITE VISITS) BY REPRESENTATIVES OF THE COUNTY, CITY & SPMUD DO NOT INCLUDE INSPECTION OF CONSTRUCTION MEANS AND METHODS. SITE VISITS DURING CONSTRUCTION ARE NOT CONTINUOUS AND OBSERVATIONS ARE PERFORMED BY SPMUD INSPECTORS SOLELY FOR THE PURPOSE OF DETERMINING IF THE CONTRACTOR UNDERSTANDS DESIGN INTENT SHOWN IN THE CONTRACT DRAWINGS. OBSERVATIONS DO NOT GUARANTEE CONTRACTOR'S PERFORMANCE AND ARE NOT TO BE CONSTRUED AS SUPERVISION OR VERIFICATION OF CONSTRUCTION.

51. ALL SPECIFICATIONS AND CODES NOTED SHALL BE THE LATEST APPROVED EDITIONS AND REVISIONS BY THE AGENCY HAVING JURISDICTION OVER THIS PROJECT.

52. CONTRACTOR SHALL INVESTIGATE THE SITE DURING CLEARING AND EARTHWORK OPERATIONS FOR FILLED EXCAVATIONS OR BURIED STRUCTURES SUCH AS CESSPOOLS, CISTERNS, FOUNDATIONS, UTILITIES, WELLS, ETC. IF ANY SUCH STRUCTURES ARE FOUND, THE ENGINEER SHALL BE NOTIFIED IMMEDIATELY.

53. CONTRACTOR SHALL OBTAIN A KEY TO BOLTED MANHOLES FROM SPMUD. CONTRACTOR SHALL MAINTAIN AND BE RESPONSIBLE FOR THE KEY DURING THE COURSE OF THE PROJECT. UPON COMPLETION OF THE PROJECT, CONTRACTOR SHALL RETURN KEY TO SPMUD..

54. THE PROJECT SPECIFIC GEOTECHNICAL REPORT ENTITLED DESIGN LEVEL GEOTECHNICAL STUDY - FOOTHILL TRUNK PIPELINE ALIGNMENT DATED SEPTEMBER 2016 PREPARED BY CGI, IS AVAILABLE AT SPMUD OFFICE AND IS INCORPORATED INTO THE CONTRACT DOCUMENTS BY REFERENCE.

NO.	DATE	REVISION	BY	APVD
1		ADDENDUM REVISIONS IN CONFORMED SET	DL	TL

DESIGN M FISHER
DRAWN T LEWIS
CHECKED M FISHER
APPROVED M FISHER

SOUTH PLACER MUNICIPAL UTILITY DISTRICT
SERVING PLACER COUNTY

WATERWORKS ENGINEERS
1322 Blue Oaks Blvd, Suite 300 • Roseville, CA 95678 • 916-790-2888

SOUTH PLACER MUNICIPAL UTILITY DISTRICT
FOOTHILLS TRUNK SEWER REPLACEMENT PROJECT

GENERAL
GENERAL NOTES CONT

REGISTERED PROFESSIONAL ENGINEER
MICHAEL J. FISHER
No. C 67194
CIVIL
STATE OF CALIFORNIA
10-8-2019

DATE FEBRUARY 2020
PROJECT NUMBER 14-068
DRAWING NUMBER G-5
SHEET NUMBER 5

L:\CAD\PROJECTS\14-068 SPMUD FOOTHILLS TRUNK SEWER_(S)\DRAWINGS\DELIVERABLES\WORKING ALIGNMENTS\FINAL CONTRACT SET\1468D-G-D-CD.DWG

JOB NUMBER: 14-068 FILENAME: 1468D-G-D-CD.DWG PLOT DATE: 24-Feb-20 PLOT TIME: 08:10:38

SURVEY CONTROL POINT TABLE

POINT NO.	ELEVATION	NORTHING	EASTING	DESCRIPTION
100	291.25'	2048878.8610'	6785436.3370'	14641-100/ SMAW
101	285.47'	2048934.0250'	6785550.9850'	14641-101/ 60d
102	296.97'	2048771.9730'	6785437.3980'	14641-102/ SMAW
103	290.40'	2048716.4590'	6784772.0880'	14641-103/ SMAW
104	278.98'	2048143.8670'	6784351.2700'	14641-104/ SMAW
105	272.26'	2048151.5130'	6784157.8310'	14641-105/ SMAW
106	267.02'	2048471.2070'	6784076.9380'	14641-106/ 1/2 RBR
107	259.54'	2048392.8730'	6783723.3960'	14641-107/ 1/2 RBR

HORIZONTAL DATUM:
CALIFORNIA STATE PLANE
COORDINATE SYSTEM ZONE II
NAD83(1991.35) CA HPGN

VERTICAL DATUM:
NGVD29 CITY OF ROCKLIN
GEODETIC NETWORK
PT. R12-12 ELEV 284.02

EASEMENT LEGEND

(ALSO SHOWN ON SHEET G-3)

NEW

- EXST EASEMENT LINE
- RW — RIGHT-OF-WAY LINE
- PL — PROPERTY LINE
- CA — CONSTRUCTION ACCESS LINE
- PE — NEW PERMANENT EASEMENT

NOTE:
CONTRACTOR MUST PERFORM ALL WORK INCLUDING PIPE CONSTRUCTION, STORAGE, ACCESS AND OTHER CONSTRUCTION RELATED ACTIVITIES WITH IN CA LIMITS. STARTING AT THE EAST-WEST RETAINING WALL HEADING 25 FT NORTH TO THE DELINEATED CA LIMITS.

60 0 60 120 FEET
SCALE 1"=60'

10' SEWER EASEMENT PER R MAPS 55
APPROXIMATE 10' SPMUD SEWER EASEMENT PER R MAPS 55
APPROXIMATE IRRIGATION LINE PER 192-245
15' SEWER ACCESS EASEMENT PER S MAPS 99
SEWER ACCESS EASEMENT PER S MAPS 99
10' SEWER EASEMENT PER 1236-637
10' STORM DRAIN EASEMENT PER S MAPS 99
10' EXST SEWER EASEMENT
10' SEWER PIPELINE PER 1233-451
10' SEWER EASEMENT PER 1233-447
APN 045-130-061 SIERRA COLLEGE
GOOD APN 045-430-009
BIGGS APN 045-430-008
PEREZ APN 045-430-007
GILDONE APN 045-430-006
BERKE APN 045-430-005
PHILLIPS APN 045-430-004
O'MALLEY APN 045-430-003
BRADLE APN 045-430-002
CARRICO APN 045-430-001
MURPHY APN 045-430-010
DLC ROCKLIN, ET AL APN 045-130-055
DLC ROCKLIN, ET AL APN 045-130-028
CORONA CR
EL DON DR
MATCH LINE
SEE BELOW FOR CONT

NEW ACCESS ROAD, SEE DWG C-7
40' ROAD & UTILITY EASEMENT PER 2014-11163
ROBERSON APN 045-120-060
10' SEWER PIPELINE PER 1233-438
ROBERSON APN 045-120-052
ROCKLIN MEADOW GREENBRAE LLC APN 045-120-059
APN 045-120-056 ROCKLIN MEADOW GREENBRAE LLC
AGUILAR RD
APN 045-141-026
APN 045-141-037
APN 045-141-090
APN 045-141-016 GLEFFE
10' SEWER EASEMENT PER 1233-443
APN 045-141-091 PACE
JAMAR APN 045-141-092
AREA 'K' ROAD & PRIVATE 40' & PUBLIC UTILITIES EASEMENT PER 31PM120
10' SEWER PIPELINE PER 1235-390
ROSSMAN APN 045-141-022
10' SEWER PIPELINE PER 1234-382
10' SEWER PIPELINE PER 1233-443
WIDTH VARIES. RW LIMITS WITHIN THE TRAVELLED WAY OF ARROWHEAD DR
ANDERSON APN 045-141-020
JENNINGS APN 045-141-021
10' PG&E EASEMENT PER 907-374 & 938-250
ARROWHEAD DR
APN 045-141-007 THEIS
APN 045-141-011 LIPSHUTZ
APN 045-141-012 WAYNE
APN 045-141-013
APN 045-141-047
SEWER EASEMENT PER 1037-305
40' ROAD & UTILITIES EASEMENT PER 1001-149

REGISTERED PROFESSIONAL ENGINEER
MICHAEL P. FISHER
No. C067194
CIVIL
STATE OF CALIFORNIA
10-8-2019

DESIGN M FISHER
DRAWN T LEWIS
CHECKED M FISHER
APPROVED M FISHER

SPMUD SOUTH PLACER MUNICIPAL UTILITY DISTRICT

WATERWORKS ENGINEERS
1322 Blue Oaks Blvd, Suite 300 • Roseville, CA 95678 • 916-790-2888

SOUTH PLACER MUNICIPAL UTILITY DISTRICT
FOOTHILLS TRUNK SEWER REPLACEMENT PROJECT

GENERAL
HORIZONTAL CONTROL PLAN

DATE FEBRUARY 2020
PROJECT NUMBER 14-068
DRAWING NUMBER G-6
SHEET NUMBER 6

L:\CAD\PROJECTS\14-068 SPMUD FOOTHILLS TRUNK SEWER_(S)\DRAWINGS\DELIVERABLES\WORKING ALIGNMENTS\FINAL CONTRACT SET\1468D-G-D-CD.DWG

JOB NUMBER: 14-068 FILENAME: 1468D-G-D-CD.DWG PLOT DATE: 24-Feb-20 PLOT TIME: 08:43:11

CONSTRUCTION SEQUENCING TABLE			
SEQUENCE #	BEGIN TO END STA NO.	DESCRIPTION	BYPASS PUMPING
1	10+00 TO 18+94	PARALLEL CONSTRUCTION FROM JS 1 TO SSMH 9	NOT REQUIRED EXCEPT FROM STA: 18+50 TO SSMH9
2	18+94 TO 21+55	REPLACE-IN-PLACE CONSTRUCTION FROM SSMH 9 TO 11	REQUIRED FROM EXST SSMH I10-20 TO SSMH8
3	21+55 TO 23+15	NEW CONSTRUCTION FROM SSMH 11 TO SSMH 12	NOT REQUIRED
4	23+15 TO 27+29	PARALLEL CONSTRUCTION FROM SSMH 12 TO SSMH 14	NOT REQUIRED EXCEPT AROUND EXST SSMH I10-45
5	27+29 TO 37+29	REPLACE-IN-PLACE CONSTRUCTION FROM SSMH 14 TO 19	REQUIRED FROM EXST SSMH I10-74 TO SSMH15

CONSTRUCTION SEQUENCING NOTES:

1. CONTRACTOR MAY SUBMIT AN ALTERNATE WORK SEQUENCE FOR APPROVAL WITHIN THE PROJECT WORK PLAN AS PER SPECS 01130. THE CONTRACTOR SHALL BE SOLELY RESPONSIBLE FOR THE MEANS AND METHODS OF CONSTRUCTION.
2. CONTRACTOR SHALL INSTALL SEWAGE BYPASS SYSTEM FOR REPLACE-IN-PLACE CONSTRUCTION AS PER SPECS 01130. CONTRACTOR SHALL MAINTAIN EXISTING SEWER SERVICE TO ALL PROPERTIES DURING THE CONSTRUCTION AND SEWAGE BYPASS PUMPING.
3. SEE SPECS 01130 AND 01550 FOR BYPASS PUMPING REQUIREMENTS AND USING NEW SEWER SYSTEM.
4. CONTRACTOR TO UTILIZE EXISTING DISTRICT EASEMENT IF/WHEN UTILIZING SSMH I10-74 FOR SEWAGE BYPASS PUMPING OPERATIONS.

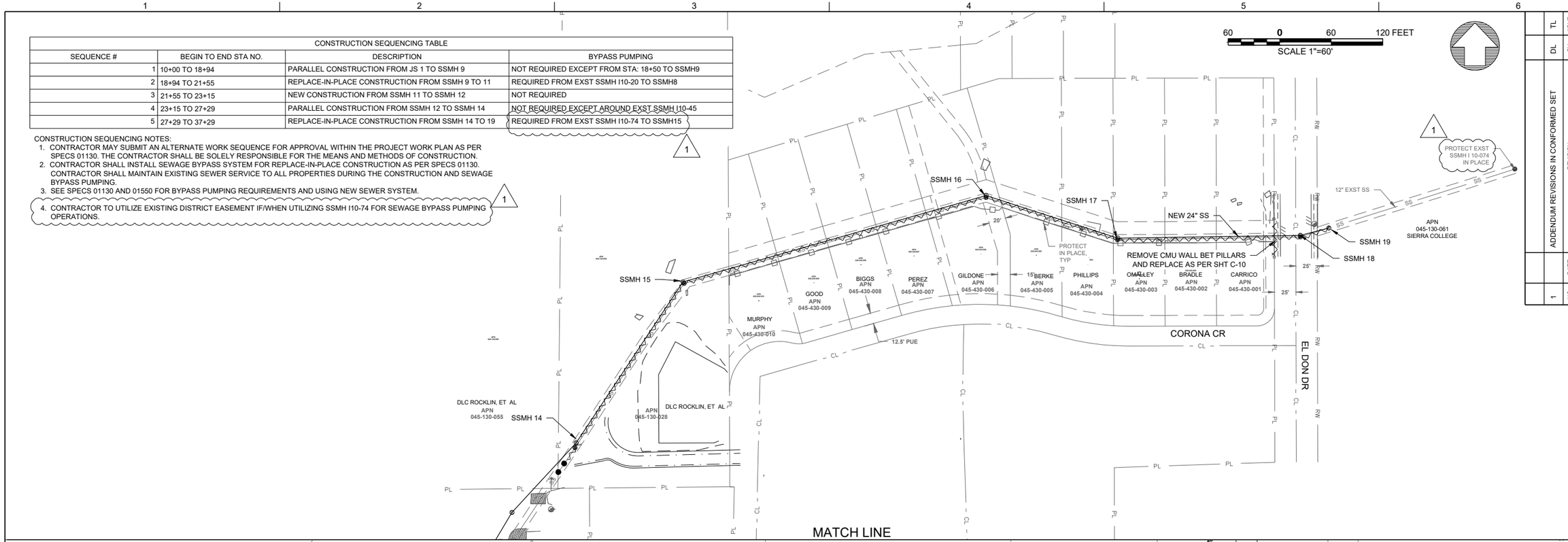

ABANDON IN PLACE NOTES:

1. CONTRACTOR SHALL COORDINATE WITH SPMUD PRIOR TO BEGINNING OF ABANDON WORK.
2. REMOVE EXISTING FRAME, COVER AND CONE. BACKFILL THE SSMH WITH 3/4" CRUSHED ROCK COMPACTED AT MINIMUM OF 90% RELATIVE COMPACTION AS PER SPECS 02300 AND BID ITEM 19.
3. SALVAGE EXISTING FRAME AND COVER AND SUPPLY TO SPMUD.
4. CONTRACTOR SHALL ABANDON EXISTING SEWER BY FILLING IT WITH CLEAN SAND AND PLACING 10' CONCRETE PLUGS ON BOTH SIDES AS PER SPECS 02220 AND BID ITEM 18.
5. FOR CLARITY SEE DWGS D-3 TO D-5 FOR EXISTING SEWER LATERAL ABANDONMENT LIMITS.

DEMOLITION / REMOVAL NOTES:

1. CONTRACTOR SHALL COORDINATE WITH SPMUD PRIOR TO BEGINNING OF DEMOLITION WORK.
2. DEMOLISH UNDERGROUND PIPING AND SSMH AS SHOWN AND PER SPECS 02220 AND BID ITEM 9B.
3. SALVAGE EXISTING FRAME AND COVER AND SUPPLY TO SPMUD.
4. CONTRACTOR SHALL DEMOLISH ALL EXST SSMH'S SHOWN HERE, EXCEPT NOTED DIFFERENTLY.

NO.	DATE	REVISION	BY	APV'D
1		ADDENDUM REVISIONS IN CONFORMED SET	DL	TL

DESIGN M FISHER
DRAWN T LEWIS
CHECKED M FISHER
APPROVED M FISHER

SOUTH PLACER MUNICIPAL UTILITY DISTRICT
SERVING PLACER COUNTY

WATERWORKS ENGINEERS
1322 Blue Oaks Blvd, Suite 300 • Roseville, CA 95678 • 916-790-2888

SOUTH PLACER MUNICIPAL UTILITY DISTRICT
FOOTHILLS TRUNK SEWER REPLACEMENT PROJECT

DEMOLITION
DEMOLITION & CONSTRUCTION SEQUENCING

REGISTERED PROFESSIONAL ENGINEER MICHAEL P. FISHER No. C071194 CIVIL STATE OF CALIFORNIA
10-8-2019

DATE FEBRUARY 2020
PROJECT NUMBER 14-068
DRAWING NUMBER D-1
SHEET NUMBER 7

L:\CAD\PROJECTS\14-068 SPMUD FOOTHILLS TRUNK SEWER_(S)\DRAWINGS\DELIVERABLES\WORKING ALIGNMENTS\FINAL CONTRACT SET\1468D-G-D-CD.DWG

JOB NUMBER: 14-068 FILENAME: 1468D-G-D-CD.DWG PLOT DATE: 24-Feb-20 PLOT TIME: 08:19:48

TREE REMOVAL LIST (REQUIRED)

APN #	PLAN SHEET #	TREE REMOVAL TAG #	SPECIES	DBH PER TRUNK (IN)	LATITUDE	LONGITUDE
045-120-059	D-3	102	Goodding's black willow (Salix gooddingii)	15+6+18	38.7844	-121.2217
		103	Goodding's black willow (Salix gooddingii)	10+14	38.7845	-121.2216
		3	Interior live oak (Quercus wislizeni)	15+13+9	38.7845	-121.2215
		1	Blue oak (Quercus douglasii)	12+12	38.7844	-121.2213
045-120-060	D-3	2	Interior live oak (Quercus wislizeni)	11+14+12	38.7845	-121.2211
045-120-052	D-3	101	Arroyo willow (Salix lasiolepis)	8+2	38.7843	-121.2202
045-141-022	D-4	26	Valley oak (Quercus lobata)	14	38.7842	-121.2186
		116	Goodding's black willow (Salix gooddingii)	48	38.7841	-121.2187
045-141-091	D-4	119	Fremont cottonwood (Populus fremontii)	24	38.7840	-121.2188
		118	Fremont cottonwood (Populus fremontii)	21	38.7840	-121.2188
		117	Fremont cottonwood (Populus fremontii)	17	38.7840	-121.2188
		25	Interior live oak (Quercus wislizeni)	7	38.7843	-121.2185
		24	Interior live oak (Quercus wislizeni)	6+5	38.7845	-121.2184
045-130-055	D-4	115	Goodding's black willow (Salix gooddingii)	10	38.7848	-121.2181
		23	Valley oak (Quercus lobata)	6+6	38.7848	-121.2181
045-130-028	D-4	114	Goodding's black willow (Salix gooddingii)	18	38.7849	-121.2180
		113	Foothill Pine (Pinus sabiniana)	20	38.7850	-121.2179
	D-5	19	Valley oak (Quercus lobata)	8	38.7852	-121.2177
		112 (REMOVED)	Foothill Pine (Pinus sabiniana)	15	38.7852	-121.2177
		111 (REMOVED)	Foothill Pine (Pinus sabiniana)	14	38.7852	-121.2177
		110	Foothill Pine (Pinus sabiniana)	24	38.7853	-121.2177
		109	Foothill Pine (Pinus sabiniana)	23	38.7853	-121.2177
		108	Foothill Pine (Pinus sabiniana)	22	38.7854	-121.2176
		18	Valley oak (Quercus lobata)	16	38.7854	-121.2176
		4	Interior live oak (Quercus wislizeni)	6	38.7855	-121.2175
		105	Foothill Pine (Pinus sabiniana)	7	38.7855	-121.2175
		106	Foothill Pine (Pinus sabiniana)	7	38.7855	-121.2174
045-430-009	D-5	6	Blue oak (Quercus douglasii)	9	38.7856	-121.2171
		7	Interior live oak (Quercus wislizeni)	12	38.7856	-121.2170
045-430-008	D-5	8	Interior live oak (Quercus wislizeni)	8	38.7856	-121.2168
		9	Interior live oak (Quercus wislizeni)	8+8	38.7856	-121.2168
045-430-005	D-5	11	Interior live oak (Quercus wislizeni)	4+2	38.7857	-121.2161
045-430-004	D-5	107	Prunus sp.	12	38.7856	-121.2158
045-430-003	D-5	14	Interior live oak (Quercus wislizeni)	8+4	38.7856	-121.2157

TREE REMOVAL LIST (IF NEEDED)

APN #	PLAN SHEET #	TREE REMOVAL TAG #	SPECIES	DBH PER TRUNK (IN)	LATITUDE	LONGITUDE
045-130-028	D-4	22	Interior live oak (Quercus wislizeni)	8	38.7850	-121.2179
		21	Interior live oak (Quercus wislizeni)	7	38.7851	-121.2179
		20	Interior live oak (Quercus wislizeni)	6	38.7851	-121.2179
045-430-005	D-5	10	Interior live oak (Quercus wislizeni)	12	38.7857	-121.2161
		12	Interior live oak (Quercus wislizeni)	6+4	38.7857	-121.2160
045-430-004	D-5	13	Interior live oak (Quercus wislizeni)	11	38.7857	-121.2159
045-430-001	D-5	17	Interior live oak (Quercus wislizeni)	3+11+6	38.7856	-121.2153
		16	Interior live oak (Quercus wislizeni)	10+12+14	38.7856	-121.2153
145-141-007	D-4	104	Coast Redwood (Sequoia sempervirens)	38	38.7835	-121.2192
045-430-010	D5	5	Valley Oak (Quercus Lobata)	12	38.7856	-121.2172

LEGEND:

- ● 30"OAK#377 - TREE (DIAM)(TYPE)(TAG #) AS ORIGINALLY SURVEYED
- ✕ 30"OAK#377 (XX) - TREE MARKED FOR REMOVAL W/ TREE REMOVAL TAG #
- ● 30"OAK#377 (XX) - TREE MARKED AS "IF NEEDED" TO BE REMOVED PER ARBORIST AND ENGINEER APPROVAL

TREE REMOVAL / PROTECTION NOTES:

1. CONTRACTOR SHALL USE DBH LISTED IN THIS TABLE FOR TREE SIZE AND # OF TRUNKS. CONTRACTOR SHALL NOTE THE TREE DIAMETER SHOWN ON DRAWINGS WAS ORIGINALLY SURVEYED AND IT MAY NOT BE ACCURATE.
2. TREE REMOVAL LATITUDE AND LONGITUDE COORDINATES ARE BASED OFF OF THE NAD83 HORIZONTAL DATUM.
3. ALL OTHER TREES NOT MARKED FOR REMOVAL MUST BE PROTECTED IN PLACE AS PER SPECS 01130.
4. TREES LISTED UNDER "IF NEEDED" TABLE SHALL ONLY BE REMOVED IF REQUESTED BY THE ARBORIST AND THE ENGINEER DURING CONSTRUCTION.
5. IF TREES WITH DIA LESS THAN 6" ARE REMOVED DURING CONSTRUCTION AND THEY ARE NOT LISTED IN THESE TABLES. IT'S COST SHALL BE CONSIDERED AS PART OF LF COST FOR THE PIPE INSTALLATION NO ADDITIONAL PAYMENT SHALL BE MADE TO THE CONTRACTOR. (1)

NO.	DATE	REVISION	BY	APVD
1		ADDENDUM REVISIONS IN CONFORMED SET	DL	TL

DESIGN M FISHER
DRAWN T LEWIS
CHECKED M FISHER
APPROVED M FISHER

SOUTH PLACER MUNICIPAL UTILITY DISTRICT

WATERWORKS ENGINEERS
1322 Blue Oaks Blvd, Suite 300 • Roseville, CA 95678 • 916-790-2988

SOUTH PLACER MUNICIPAL UTILITY DISTRICT
FOOTHILLS TRUNK SEWER REPLACEMENT PROJECT

DEMOLITION
TREE REMOVAL LIST

REGISTERED PROFESSIONAL ENGINEER MICHAEL P. FISHER No. C067194 CIVIL STATE OF CALIFORNIA
10-8-2019

DATE FEBRUARY 2020
PROJECT NUMBER 14-068
DRAWING NUMBER D-2
SHEET NUMBER 8

L:\CAD\PROJECTS\14-068 SPMUD FOOTHILLS TRUNK SEWER_(S)\DRAWINGS\DELIVERABLES\WORKING ALIGNMENTS\FINAL CONTRACT SET\1468D-G-D-CD.DWG

JOB NUMBER: 14-068 FILENAME: 1468D-G-D-CD.DWG PLOT DATE: 24-Feb-20 PLOT TIME: 08:20:50

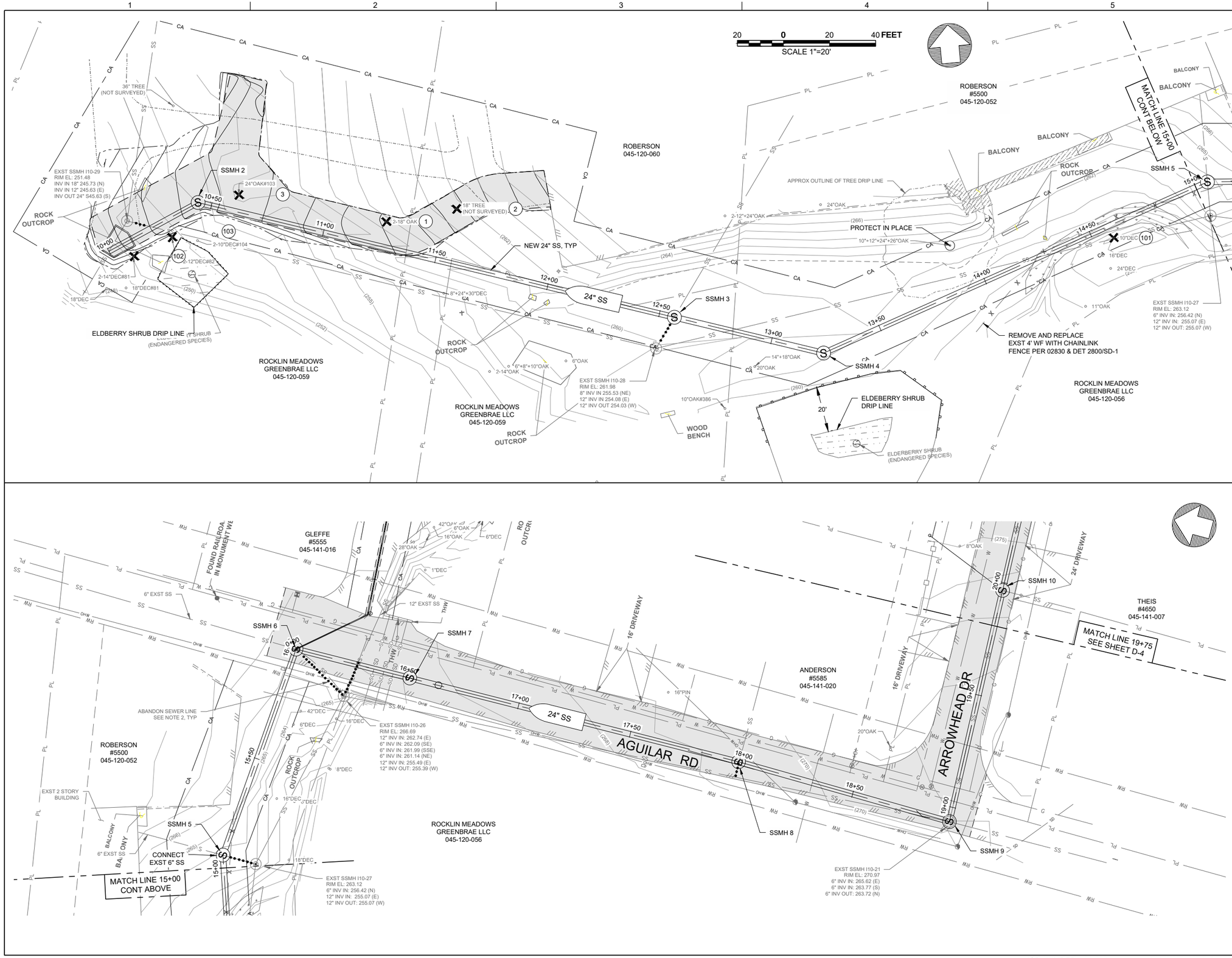

DEMOLITION NOTE:

1. SEE DWG D2 FOR TREE LIST AND LEGEND.
2. SEE DWG D1 FOR SEWER LATERAL ABANDONMENT. IT IS SHOWN HERE FOR CLARITY.

DESIGN M FISHER
DRAWN T LEWIS
CHECKED M FISHER
APPROVED M FISHER

SOUTH PLACER MUNICIPAL UTILITY DISTRICT
SOUTH PLACER MUNICIPAL UTILITY DISTRICT

WATERWORKS ENGINEERS
1322 Blue Oaks Blvd, Suite 300 • Roseville, CA 95678 • 916-790-2888

SOUTH PLACER MUNICIPAL UTILITY DISTRICT
FOOTHILLS TRUNK SEWER REPLACEMENT PROJECT

DEMOLITION
TREE REMOVAL & PROTECTION PLAN STA 10+00 TO 19+75

REGISTERED PROFESSIONAL ENGINEER MICHAEL P. FISHER No. C67194 CIVIL STATE OF CALIFORNIA
10-8-2019

DATE FEBRUARY 2020
PROJECT NUMBER 14-068
DRAWING NUMBER D-3
SHEET NUMBER 9

L:\CAD\PROJECTS\14-068 SPMUD FOOTHILLS TRUNK SEWER_(S)\DRAWINGS\DELIVERABLES\WORKING ALIGNMENTS\FINAL CONTRACT SET\1468D-C.DWG

JOB NUMBER: 14-068 FILENAME: 1468D-C.DWG PLOT DATE: 21-Feb-20 PLOT TIME: 10:56:51

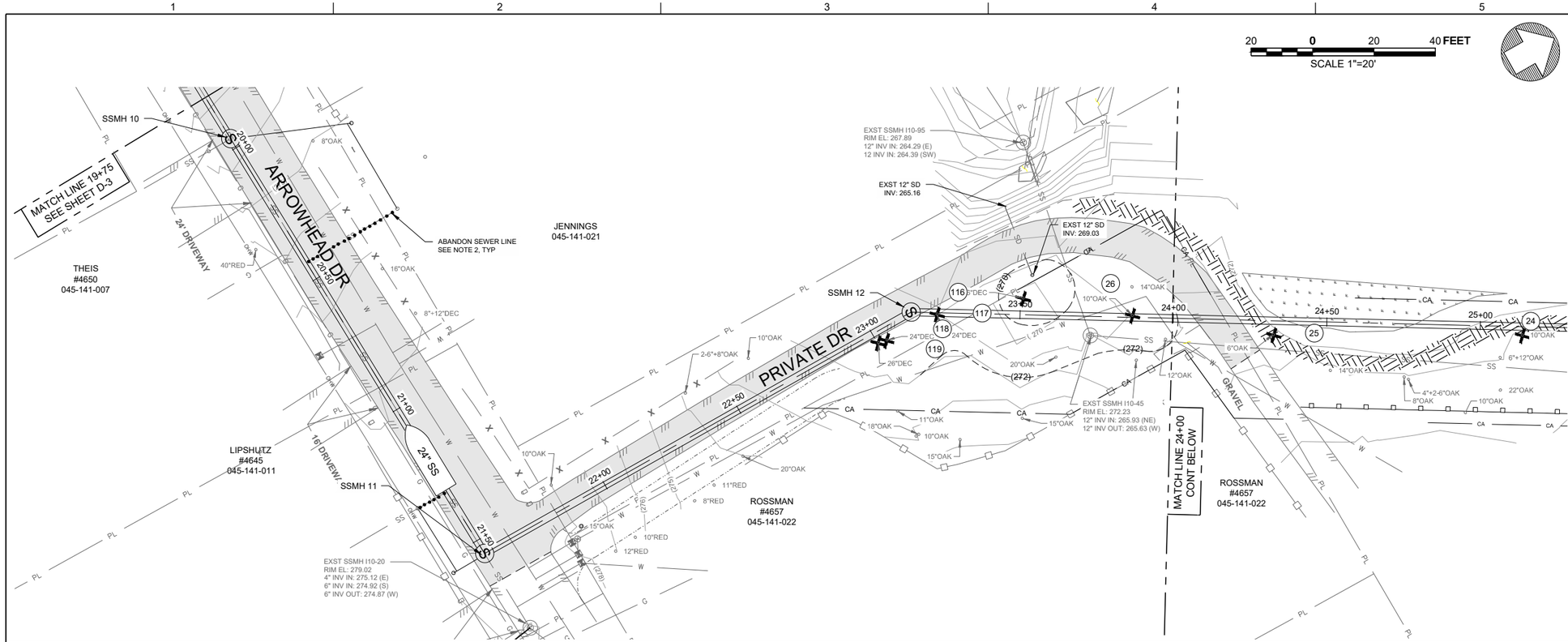

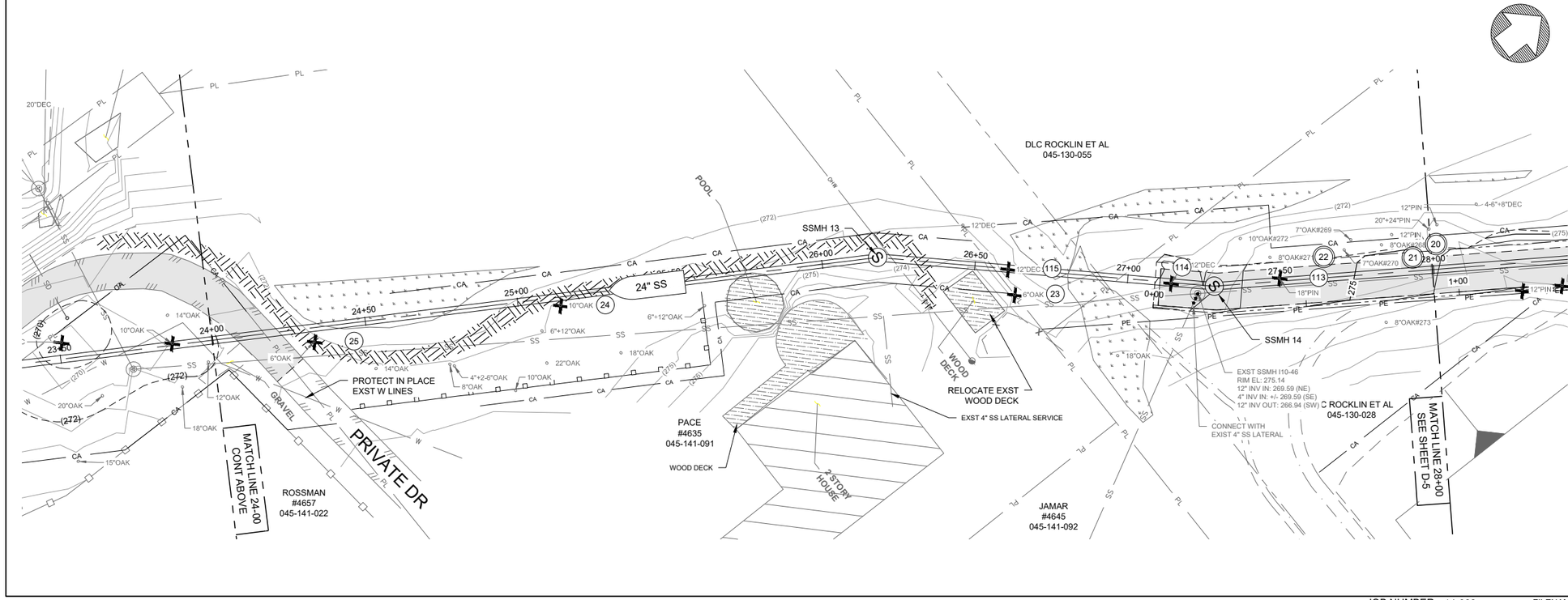

DEMOLITION NOTE:

1. SEE DWG D2 FOR TREE LIST AND LEGEND.
2. SEE DWG D1 FOR SEWER LATERAL ABANDONMENT. IT IS SHOWN HERE FOR CLARITY.

DESIGN M FISHER
DRAWN T LEWIS
CHECKED M FISHER
APPROVED M FISHER

SOUTH PLACER MUNICIPAL UTILITY DISTRICT
FOOTHILLS TRUNK SEWER REPLACEMENT PROJECT

DEMOLITION
TREE REMOVAL & PROTECTION PLAN
STA 19+75 TO 28+00

WATERWORKS ENGINEERS
1322 Blue Oaks Blvd, Suite 300 • Roseville, CA 95678 • 916-780-2888

REGISTERED PROFESSIONAL ENGINEER
MICHAEL D. FISHER
No. C67194
CIVIL
STATE OF CALIFORNIA
10-8-2019

DATE FEBRUARY 2020
PROJECT NUMBER 14-068
DRAWING NUMBER D-4
SHEET NUMBER 10

L:\CAD\PROJECTS\14-068 SPMUD FOOTHILLS TRUNK SEWER_(SI)\DRAWINGS\DELIVERABLES\WORKING ALIGNMENTS\FINAL CONTRACT SET\1468D-C.DWG

JOB NUMBER: 14-068 FILENAME: 1468D-C.DWG PLOT DATE: 21-Feb-20 PLOT TIME: 10:57:35

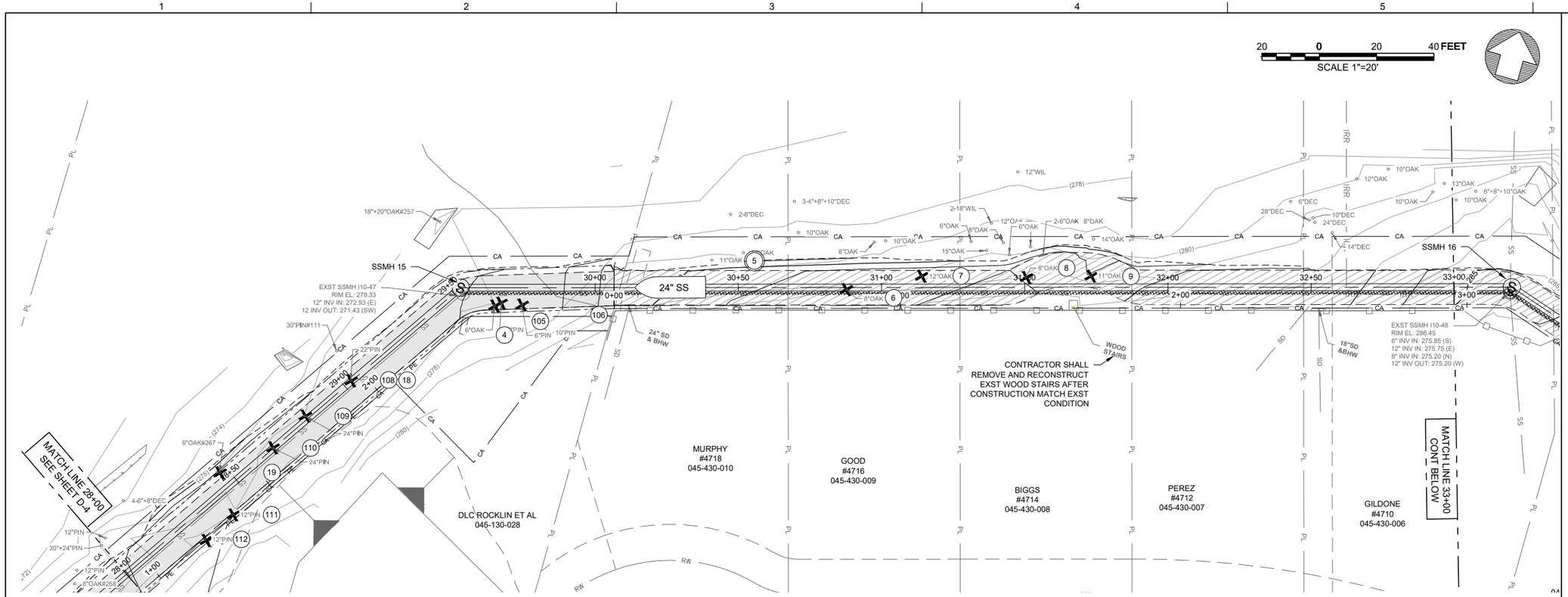

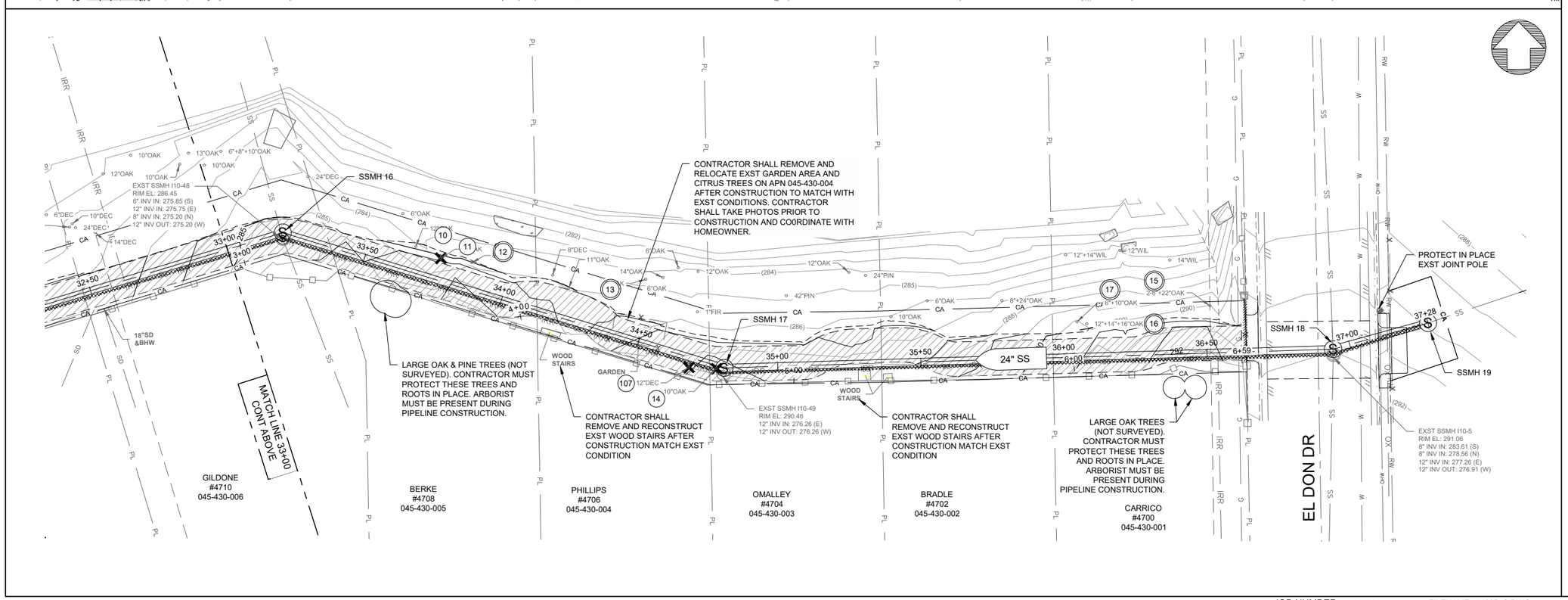

DEMOLITION NOTE:

1. SEE DWG D2 FOR TREE LIST AND LEGEND.
2. SEE DWG D1 FOR SEWER LATERAL ABANDONMENT. IT IS SHOWN HERE FOR CLARITY.

DESIGN M FISHER
DRAWN T LEWIS
CHECKED M FISHER
APPROVED M FISHER

SOUTH PLACER MUNICIPAL UTILITY DISTRICT

WATERWORKS ENGINEERS
1322 Blue Oaks Blvd, Suite 300 • Roseville, CA 95678 • 916-790-2888

SOUTH PLACER MUNICIPAL UTILITY DISTRICT
FOOTHILLS TRUNK SEWER REPLACEMENT PROJECT

DEMOLITION
TREE REMOVAL & PROTECTION PLAN STA 28+00 TO END

REGISTERED PROFESSIONAL ENGINEER MICHAEL P. FISHER No. C071194 CIVIL STATE OF CALIFORNIA
10-8-2019

DATE FEBRUARY 2020
PROJECT NUMBER 14-068
DRAWING NUMBER D-5
SHEET NUMBER 11

JOB NUMBER: 14-068 FILENAME: 1468D-C.DWG PLOT DATE: 21-Feb-20 PLOT TIME: 12:46:44

L:\CAD\PROJECTS\14-068 SPMUD FOOTHILLS TRUNK SEWER_(S)\DRAWINGS\DELIVERABLES\WORKING ALIGNMENTS\FINAL CONTRACT SET\1468D-C.DWG

C-1 LINE TABLE						
LINE NO.	LENGTH	DIRECTION	START STA	END STA	START N/E	END N/E
L1	44.093'	N66° 42' 19.36"E	10+00.00'	10+44.09'	6783517.4810',2048451.6239'	6783557.9801',2048469.0611'
L2	279.111'	S71° 05' 53.69"E	10+44.09'	13+23.20'	6783557.9801',2048469.0611'	6783822.0403',2048378.6441'
L3	182.397'	N71° 19' 33.03"E	13+23.20'	15+05.60'	6783822.0403',2048378.6441'	6783994.8351',2048437.0450'

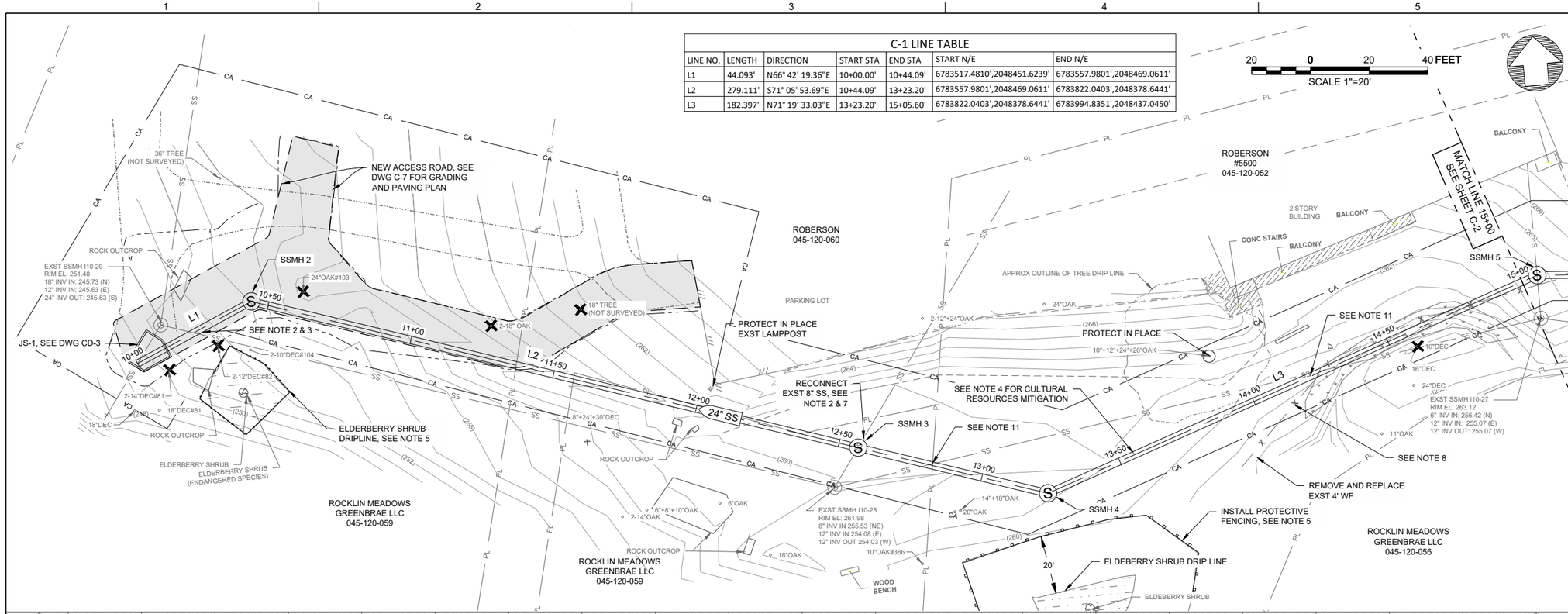

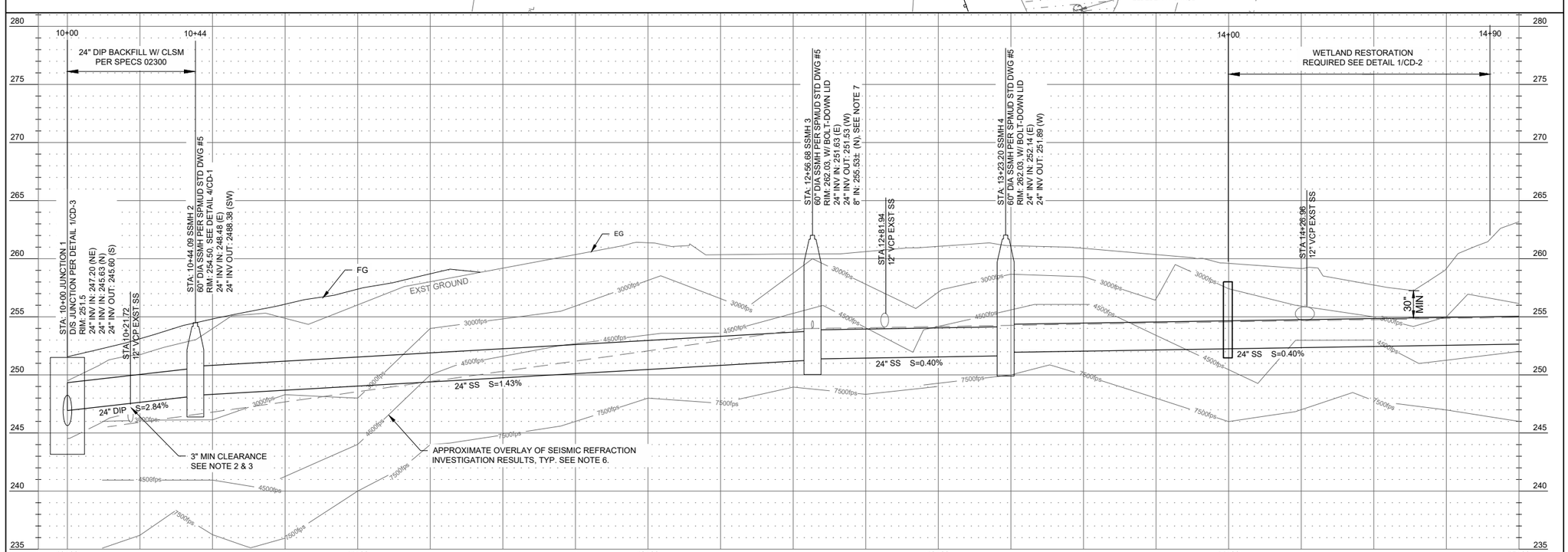

PROFILE

HORIZ: 1"=20'
VERT: 1"=5'

CONSTRUCTION NOTES:

1. DURING CONSTRUCTION, THE CONTRACTOR SHALL MAINTAIN ACCESS TO RESIDENTS AND PERTAINING SERVICE, SUCH AS POLICE, FIRE, USPS, DELIVERY VEHICLES, ETC. AT ALL TIMES.
2. DURING THE CONSTRUCTION, THE CONTRACTOR SHALL MAINTAIN FLOWS IN THE EXISTING SEWER PIPE AT ALL TIMES. CONTRACTOR MAY BYPASS SEWAGE FLOWS AS PER SPECS 01130 AND 01550
3. CONTRACTOR SHALL NOT DAMAGE THE EXISTING SEWER PIPE AT THE CROSSING. CONTRACTOR SHALL BACKFILL 10 FEET ON BOTH SIDES OF THE CROSSING WITH CLSM AS PER SPECS 02300 AND DETAIL 3/CD-1.
4. CONTRACTOR SHALL COMPLY WITH CULTURAL RESOURCE DISCOVERY REQUIREMENTS PER NOTE D.1/G-2. CONTRACTOR SHALL PROVIDE ACCESS FOR ARCHAEOLOGIST AND CULTURAL MONITOR TO OBSERVE GROUND DISTURBING ACTIVITIES, AND UPON REQUEST, SHALL ACCOMMODATE ARCHAEOLOGIST BY SETTING ASIDE TRENCH SPOILS FOR ASSESSMENT FOR A MAXIMUM OF 15 MINUTES. THE CONTRACTOR SHALL, AT NO COST TO THE OWNER, ACCOMMODATE THE ARCHAEOLOGIST HALTING EXCAVATION WITHIN 100 LF OF A DISCOVERY PER SPECS 01130 TO IMPLEMENT THE PROJECT HPTP.
5. CONTRACTOR SHALL INSTALL CHAINLINK FENCE WITH HIGH VISIBILITY ORANGE BACKING AS PER SPECS 02830 AND DETAIL 2800 ON DWG SD-1 AND K-RAIL AROUND ELDERBERRY SHRUB DRIPLINE OR MINIMUM 20 FEET OFFSET OF THE DRIPLINE AS PER SPECS 01130.
6. CONTRACTOR SHALL NOTIFY THE OWNER PRIOR TO COMMENCING ROCK EXCAVATION IN ACCORDANCE WITH SPECS 01130, 02300, AND 02310. ROCK VELOCITIES DEPICTED ON THE PIPELINE PROFILES ARE THE ENGINEER'S BEST ESTIMATION OF CONDITIONS THAT MAY BE ENCOUNTERED BASED ON THE PROJECT REFRACTION SEISMIC INVESTIGATION REPORT IN APPENDIX A. NOT ONLY MAY ROCK EXCAVATION BE REQUIRED AT UNEXPECTED LOCATIONS ALONG THE ALIGNMENT BUT THERE WILL LIKELY ALSO BE AREAS ALONG THE ALIGNMENT WHERE ROCK EXCAVATION WAS ASSUMED BUT ULTIMATELY THE EXCAVATION IS ABLE TO BE ACCOMPLISHED WITH LESS EFFORT. FOR THESE REASONS THE CONTRACTOR SHALL ASSUME THE ROCK EXCAVATION VOLUME STATED IN BID ITEM #13 IS THE TOTAL VOLUME THAT WILL BE ENCOUNTERED OVER THE COURSE OF EXCAVATION FOR THE ENTIRETY OF THE PROJECT.
7. CONTRACTOR SHALL RECONNECT EXISTING SEWER LINES WITH INSIDE DROP CONNECTION AT A NEW SSMH PER SPMUD DWG #7.
8. CONTRACTOR SHALL REMOVE AND REPLACE EXISTING FENCE FROM STA: 14+10 TO 15+10 WITH 6' HIGH CHAIN LINK FENCE AS PER SPEC 02830 AND DETAIL 2800 0N DWG SD-1.
9. DURING CONSTRUCTION, THE CONTRACTOR SHALL MAINTAIN ALL SERVICE TO RESIDENCES SUCH AS IRRIGATION, WATER, SEWER, ELECTRIC, GAS, FIBER OPTICS, CATV, TELEPHONE AND OTHERS AT ALL TIMES. CONTRACTOR MUST TAKE EXTRA PRECAUTION AND COORDINATE WITH PROPERTY OWNER FOR ALL PRIVATE UTILITIES LISTED ABOVE THAT ARE NOT MARKED.
10. CONTRACTOR MUST POTHOLE ALL APPLICABLE EXISTING UTILITIES AS PER SPECS 01130.
11. CONTRACTOR SHALL PROVIDE BYPASS PUMPING AT EXISTING SEWER PIPE CROSSING AS PER SPECS 01550 TO MAINTAIN SEWER SERVICE FOR ALL AFFECTED CUSTOMERS.

REGISTERED PROFESSIONAL ENGINEER
MICHAEL P. FISHER
No. C067194
CIVIL
STATE OF CALIFORNIA
10-8-2019

DESIGN M FISHER
DRAWN T LEWIS
CHECKED M FISHER
APPROVED M FISHER

SOUTH PLACER MUNICIPAL UTILITY DISTRICT
SOUTH PLACER MUNICIPAL UTILITY DISTRICT

WATERWORKS ENGINEERS
1322 Blue Oaks Blvd, Suite 300 • Roseville, CA 95678 • 916-790-2888

SOUTH PLACER MUNICIPAL UTILITY DISTRICT
FOOTHILLS TRUNK SEWER REPLACEMENT PROJECT

CIVIL
PLAN & PROFILE
STA 10+00 TO 15+00

DATE FEBRUARY 2020
PROJECT NUMBER 14-068
DRAWING NUMBER C-1
SHEET NUMBER 12

L:\CAD\PROJECTS\14-068 SPMUD FOOTHILLS TRUNK SEWER_(S)\DRAWINGS\DELIVERABLES\WORKING ALIGNMENTS\FINAL CONTRACT SET\1468D-C.DWG

JOB NUMBER: 14-068 FILENAME: 1468D-C.DWG PLOT DATE: 21-Feb-20 PLOT TIME: 11:30:58

C-2 LINE TABLE						
LINE NO.	LENGTH	DIRECTION	START STA	END STA	START N/E	END N/E
L4	94.851'	S85° 27' 05.96"E	15+05.60'	16+00.45'	N 2048437.04, E 6783994.83	N 2048429.52, E 6784089.39
L5	293.179'	S0° 12' 51.31"E	16+00.45'	18+93.65'	N 2048429.52, E 6784089.39	N 2048136.35, E 6784090.51
L6	261..251'	N87°56' 24.02"E	18+93.65'	21+54.88'	N 2048136.35, E 6784090.51	N 2048145.74, E 6784351.57

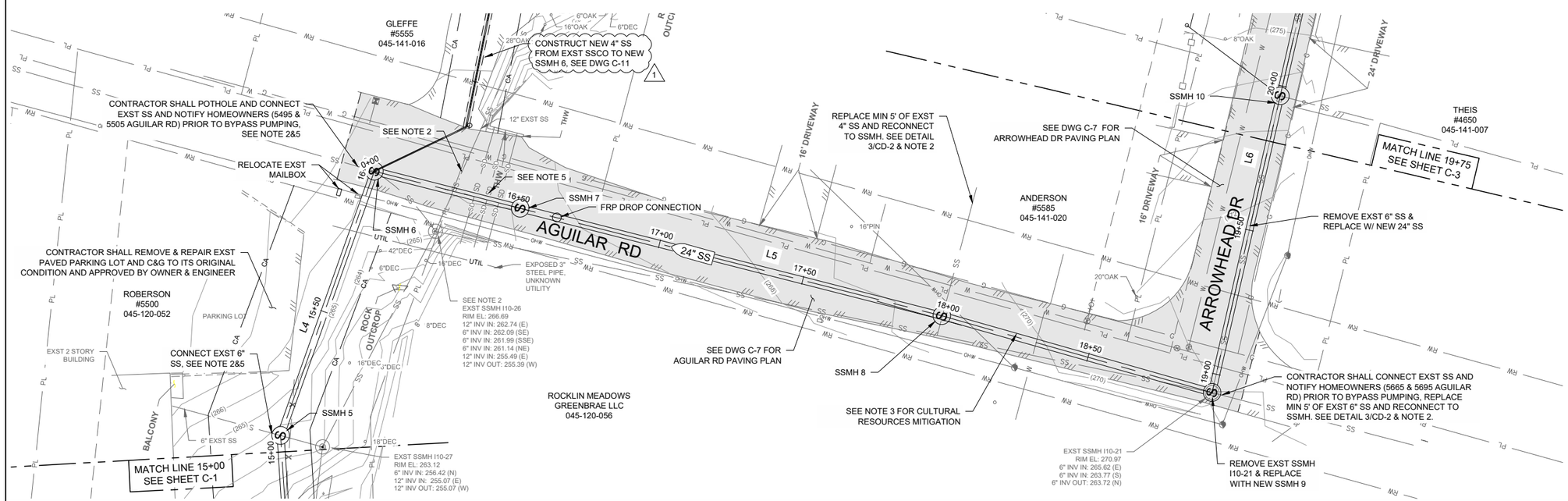

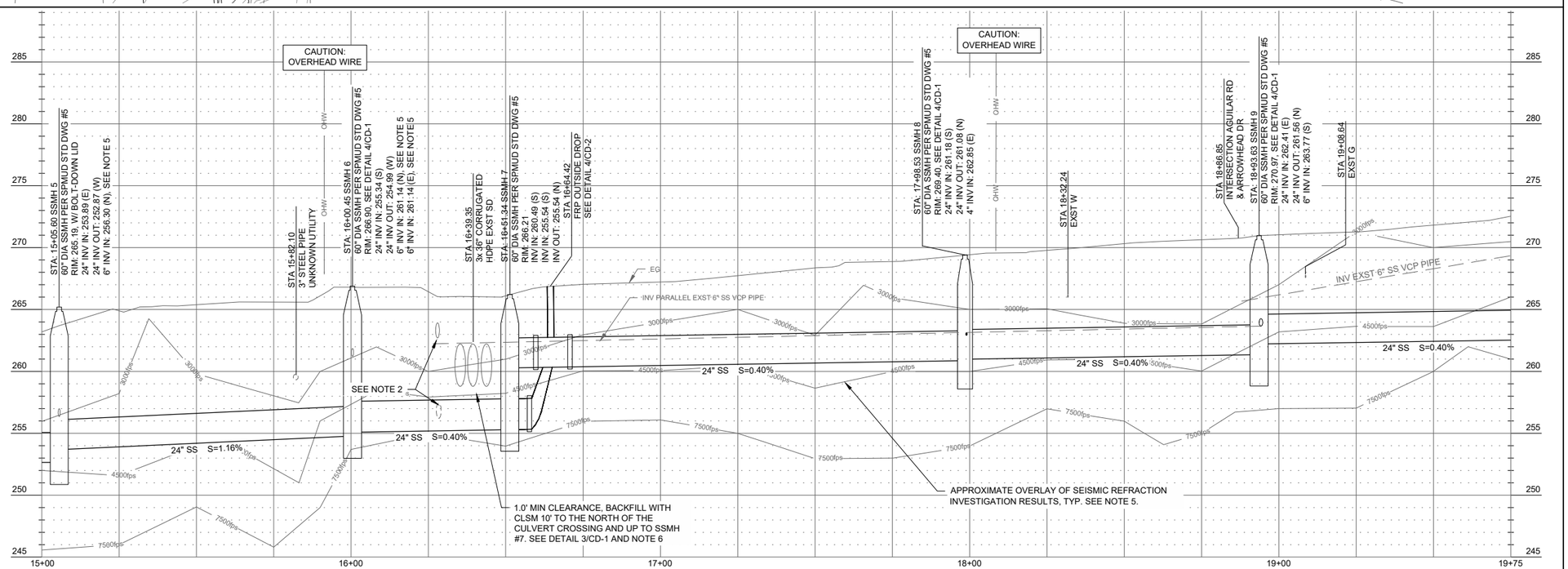

PROFILE

HORIZ: 1"=20'
VERT: 1"=5'

CONSTRUCTION NOTES:

1. DURING CONSTRUCTION, THE CONTRACTOR SHALL MAINTAIN ACCESS TO RESIDENTS AND PERTAINING SERVICE PERSON AT ALL TIMES.

2. DURING THE CONSTRUCTION, THE CONTRACTOR SHALL MAINTAIN FLOWS IN THE EXISTING SEWER PIPE AT ALL TIMES. CONTRACTOR MAY BYPASS SEWAGE FLOWS AS PER SPECS 01130 AND 01550. NOTIFY HOMEOWNER PRIOR TO BYPASS PUMPING. CONTRACTOR SHALL NOTE THAT EXST SSMH I10-26 HAS 2X 12" INCOMING INVERTS, AND 3X 6" INCOMING INVERTS OF WHICH SEVERAL CONNECTIONS MAY UTILIZE AN OUTSIDE DROP WHICH IS UNCONFIRMED. CONTRACTOR SHALL CONFIRM THE PURPOSE OF THESE EXISTING PIPE CONNECTIONS PRIOR TO CONSTRUCTION OCCURRING.

4. CONTRACTOR SHALL COMPLY WITH CULTURAL RESOURCE DISCOVERY REQUIREMENTS PER NOTE D.1/G-2. CONTRACTOR SHALL PROVIDE ACCESS FOR ARCHAEOLOGIST AND CULTURAL MONITOR TO OBSERVE GROUND DISTURBING ACTIVITIES, AND UPON REQUEST, SHALL ACCOMMODATE ARCHAEOLOGIST BY SETTING ASIDE TRENCH SPOILS FOR ASSESSMENT FOR A MAXIMUM OF 15 MINUTES. THE CONTRACTOR SHALL, AT NO COST TO THE OWNER, ACCOMMODATE THE ARCHAEOLOGIST HALTING EXCAVATION WITHIN 100 LF OF A DISCOVERY PER SPECS 01130 TO IMPLEMENT THE PROJECT HPTP.

5. CONTRACTOR SHALL NOTIFY THE OWNER PRIOR TO COMMENCING ROCK EXCAVATION IN ACCORDANCE WITH SPECS 01130, 02300, AND 02310. ROCK VELOCITIES DEPICTED ON THE PIPELINE PROFILES ARE THE ENGINEER'S BEST ESTIMATION OF CONDITIONS THAT MAY BE ENCOUNTERED BASED ON THE PROJECT REFRACTION SEISMIC INVESTIGATION REPORT IN APPENDIX A. NOT ONLY MAY ROCK EXCAVATION BE REQUIRED AT UNEXPECTED LOCATIONS ALONG THE ALIGNMENT BUT THERE WILL LIKELY ALSO BE AREAS ALONG THE ALIGNMENT WHERE ROCK EXCAVATION WAS ASSUMED BUT ULTIMATELY THE EXCAVATION IS ABLE TO BE ACCOMPLISHED WITH LESS EFFORT. FOR THESE REASONS THE CONTRACTOR SHALL ASSUME THE ROCK EXCAVATION VOLUME STATED IN BID ITEM #13 IS THE TOTAL VOLUME THAT WILL BE ENCOUNTERED OVER THE COURSE OF EXCAVATION FOR THE ENTIRETY OF THE PROJECT.

6. CONSTRUCTION SHALL OCCUR DURING DRY SEASON. CONTRACTOR SHALL PROTECT EXISTING CULVERTS IN PLACE AND MAY INCORPORATE STRUCTURAL SUPPORTS AS REQUIRED TO ACHIEVE THIS. CONTRACTOR SHALL NOTE THAT THE 3X 36" CORRUGATED HDPE CULVERTS WERE CONSTRUCTED IN 2017, BACKFILL IS UKNOWN. IF CULVERTS ARE DAMAGED DURING CONSTRUCTION, CONTRACTOR SHALL REPAIR THEM AS PER SPMUD AND CITY REQUIREMENTS.

7. CONTRACTOR MUST POTHOLE ALL APPLICABLE EXISTING UTILITIES AS PER SPECS 01130.

NO.	DATE	REVISION	BY	APV'D
1	02/19/20	ADDENDUM REVISIONS IN CONFORMED SET	MT	TL

DESIGN M FISHER
DRAWN T LEWIS
CHECKED M FISHER
APPROVED M FISHER

SOUTH PLACER MUNICIPAL UTILITY DISTRICT
SERVING PLACER COUNTY

WATERWORKS ENGINEERS
1322 Blue Oaks Blvd, Suite 300 • Roseville, CA 95678 • 916-790-2888

SOUTH PLACER MUNICIPAL UTILITY DISTRICT
FOOTHILLS TRUNK SEWER REPLACEMENT PROJECT

CIVIL
PLAN & PROFILE
STA 15+00 TO 19+75

REGISTERED PROFESSIONAL ENGINEER MICHAEL FISHER No. C071194 CIVIL STATE OF CALIFORNIA
10-8-2019

DATE FEBRUARY 2020
PROJECT NUMBER 14-068
DRAWING NUMBER C-2
SHEET NUMBER 13

L:\CAD\PROJECTS\14-068 SPMUD FOOTHILLS TRUNK SEWER_(S)\DRAWINGS\DELIVERABLES\WORKING ALIGNMENTS\FINAL CONTRACT SET\1468D-C.DWG

JOB NUMBER: 14-068 FILENAME: 1468D-C.DWG PLOT DATE: 21-Feb-20 PLOT TIME: 11:58:04

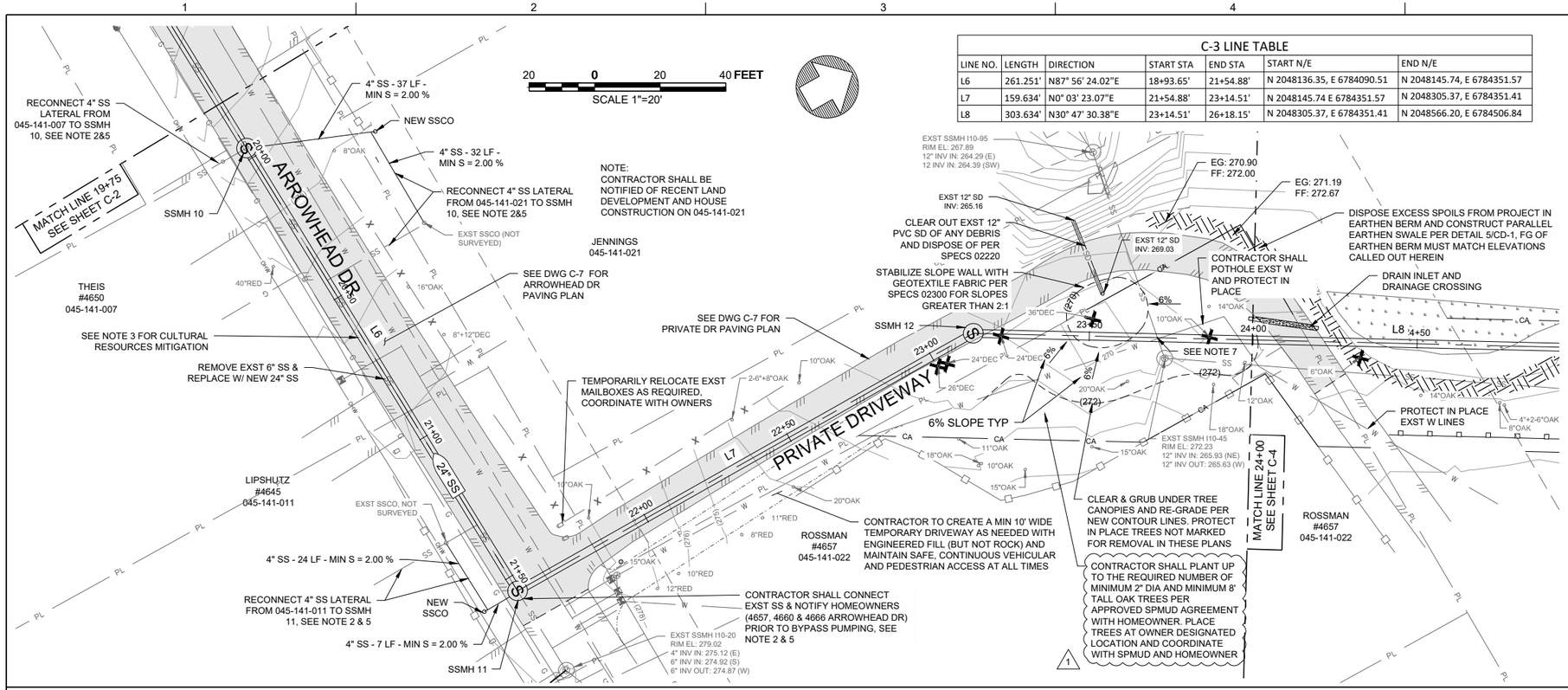

C-3 LINE TABLE

LINE NO.	LENGTH	DIRECTION	START STA	END STA	START N/E	END N/E
L6	261.251'	N87° 56' 24.02"E	18+93.65'	21+54.88'	N 2048136.35, E 6784090.51	N 2048145.74, E 6784351.57
L7	159.634'	N0° 03' 23.07"E	21+54.88'	23+14.51'	N 2048145.74 E 6784351.57	N 2048305.37, E 6784351.41
L8	303.634'	N30° 47' 30.38"E	23+14.51'	26+18.15'	N 2048305.37, E 6784351.41	N 2048566.20, E 6784506.84

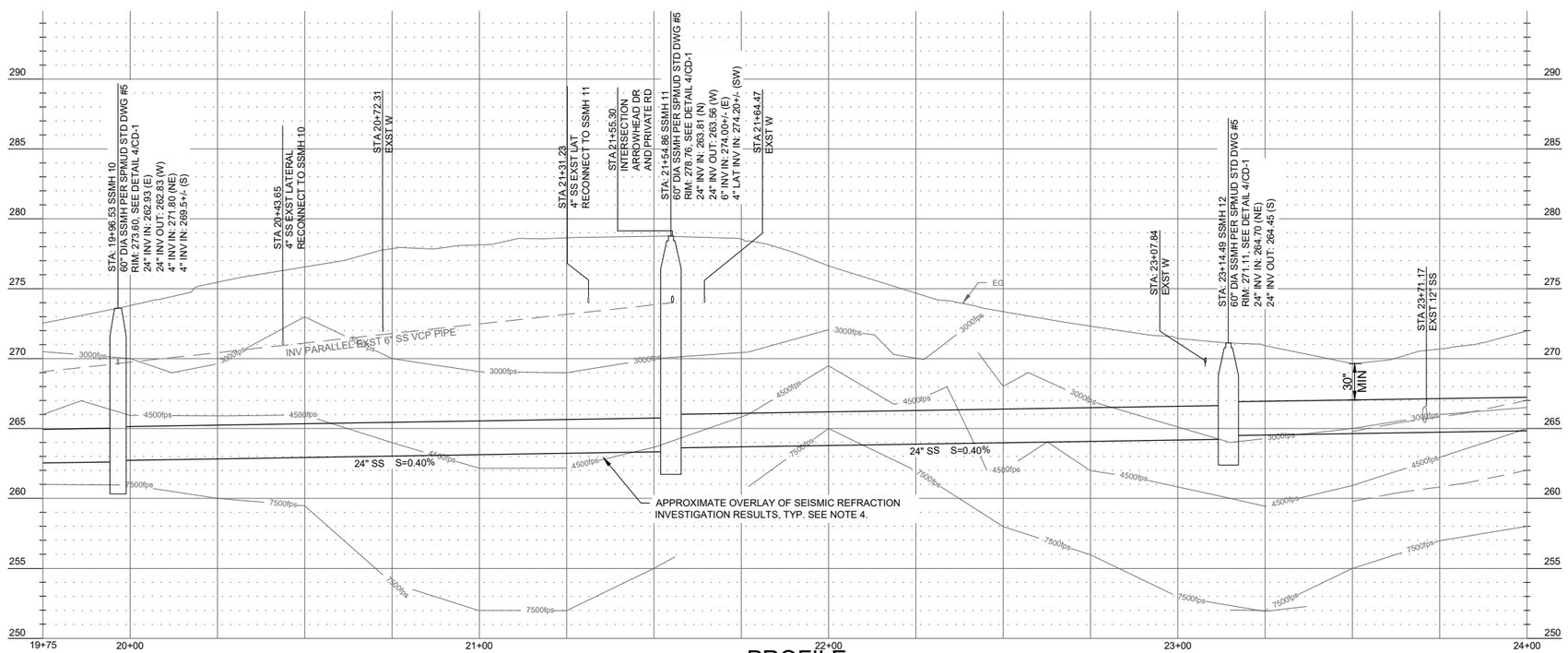

PROFILE

HORIZ: 1"=20'
VERT: 1"=5'

CONSTRUCTION NOTES:

1. DURING CONSTRUCTION, THE CONTRACTOR SHALL MAINTAIN ACCESS TO RESIDENTS AND PERTAINING SERVICE PERSON AT ALL TIMES.
2. DURING THE CONSTRUCTION, THE CONTRACTOR SHALL MAINTAIN FLOWS IN THE EXISTING SEWER PIPE AT ALL TIMES. CONTRACTOR MAY BYPASS SEWAGE FLOWS AS PER SPECS 01130 AND 01550. NOTIFY HOMEOWNER PRIOR TO BYPASS PUMPING.
3. CONTRACTOR SHALL COMPLY WITH CULTURAL RESOURCE DISCOVERY REQUIREMENTS PER NOTE D.1/G-2. CONTRACTOR SHALL PROVIDE ACCESS FOR ARCHAEOLOGIST AND CULTURAL MONITOR TO OBSERVE GROUND DISTURBING ACTIVITIES, AND UPON REQUEST, SHALL ACCOMMODATE ARCHAEOLOGIST BY SETTING ASIDE TRENCH SPOILS FOR ASSESSMENT FOR A MAXIMUM OF 15 MINUTES. THE CONTRACTOR SHALL, AT NO COST TO THE OWNER, ACCOMMODATE THE ARCHAEOLOGIST HALTING EXCAVATION WITHIN 100 LF OF A DISCOVERY PER SPECS 01130 TO IMPLEMENT THE PROJECT HPTP.
4. CONTRACTOR SHALL NOTIFY THE OWNER PRIOR TO COMMENCING ROCK EXCAVATION IN ACCORDANCE WITH SPECS 01130, 02300, AND 02310. ROCK VELOCITIES DEPICTED ON THE PIPELINE PROFILES ARE THE ENGINEER'S BEST ESTIMATION OF CONDITIONS THAT MAY BE ENCOUNTERED BASED ON THE PROJECT REFRACTION SEISMIC INVESTIGATION REPORT IN APPENDIX A. NOT ONLY MAY ROCK EXCAVATION BE REQUIRED AT UNEXPECTED LOCATIONS ALONG THE ALIGNMENT BUT THERE WILL LIKELY ALSO BE AREAS ALONG THE ALIGNMENT WHERE ROCK EXCAVATION WAS ASSUMED BUT ULTIMATELY THE EXCAVATION IS ABLE TO BE ACCOMPLISHED WITH LESS EFFORT. FOR THESE REASONS THE CONTRACTOR SHALL ASSUME THE ROCK EXCAVATION VOLUME STATED IN BID ITEM #13 IS THE TOTAL VOLUME THAT WILL BE ENCOUNTERED OVER THE COURSE OF EXCAVATION FOR THE ENTIRETY OF THE PROJECT.
5. CONTRACTOR SHALL RECONNECT EXISTING SEWER LINES WITH INSIDE DROP CONNECTION AT A NEW SSMH PER SPMUD DWG #7.
6. CONTRACTOR MUST POTHOLE ALL APPLICABLE EXISTING UTILITIES AS PER SPECS 01130.
7. CONTRACTOR SHALL PROVIDE BYPASS PUMPING AT EXISTING SEWER PIPE CROSSING AS PER SPECS 01550 TO MAINTAIN SEWER SERVICE FOR ALL AFFECTED CUSTOMERS.

NO.	DATE	REVISION	BY	APV'D
1	02/19/20	ADDENDUM REVISIONS IN CONFORMED SET	MT	TL

DESIGN M FISHER
DRAWN T LEWIS
CHECKED M FISHER
APPROVED M FISHER

SOUTH PLACER MUNICIPAL UTILITY DISTRICT
FOOTHILLS TRUNK SEWER REPLACEMENT PROJECT

WATERWORKS ENGINEERS
1322 Blue Oaks Blvd, Suite 300 • Roseville, CA 95678 • 916-790-2888

CIVIL
PLAN & PROFILE
STA 19+75 TO 24+00

REGISTERED PROFESSIONAL ENGINEER
CHRISTIAN E. FISHER
No. C67194
CIVIL
STATE OF CALIFORNIA
10-8-2019

DATE FEBRUARY 2020
PROJECT NUMBER 14-068
DRAWING NUMBER C-3
SHEET NUMBER 14

JOB NUMBER: 14-068 FILENAME: 1468D-C.DWG PLOT DATE: 21-Feb-20 PLOT TIME: 12:03:21

L:\CAD\PROJECTS\14-068 SPMUD FOOTHILLS TRUNK SEWER_(S)\DRAWINGS\DELIVERABLES\WORKING ALIGNMENTS\FINAL CONTRACT SET\1468D-C.DWG

C-4 LINE TABLE

LINE NO.	LENGTH	DIRECTION	START STA	END STA	START N/E	END N/E
L8	303.634'	N30° 47' 30.38"E	23+14.51'	26+18.15'	N 2048305.37, E 6784351.41	N 2048566.20, E 6784506.84
L9	110.097'	N42° 45' 53.28"E	26+18.15'	27+28.25'	N 2048566.20, E 6784506.84	N 2048647.03, E 6784581.60
L10	224.815'	N33° 33' 15.16"E	27+28.25'	29+53.06'	N 2048647.03, E 6784581.60	N 2048834.38, E 6784705.86

20 0 20 40 FEET
SCALE 1"=20'

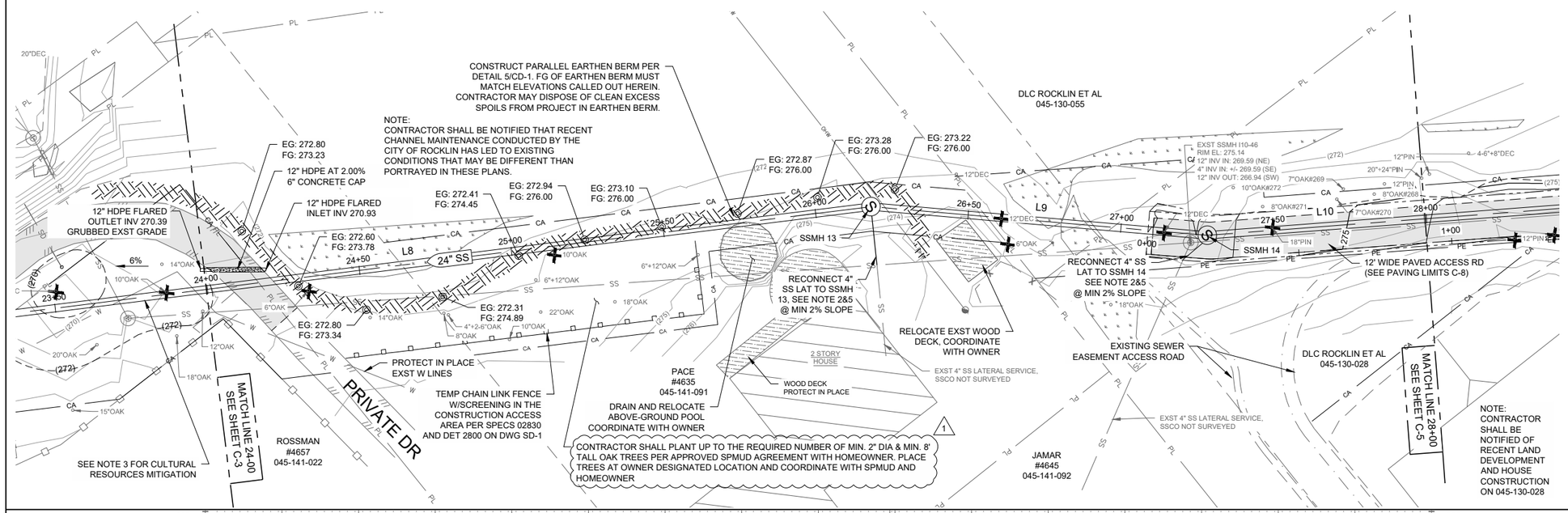

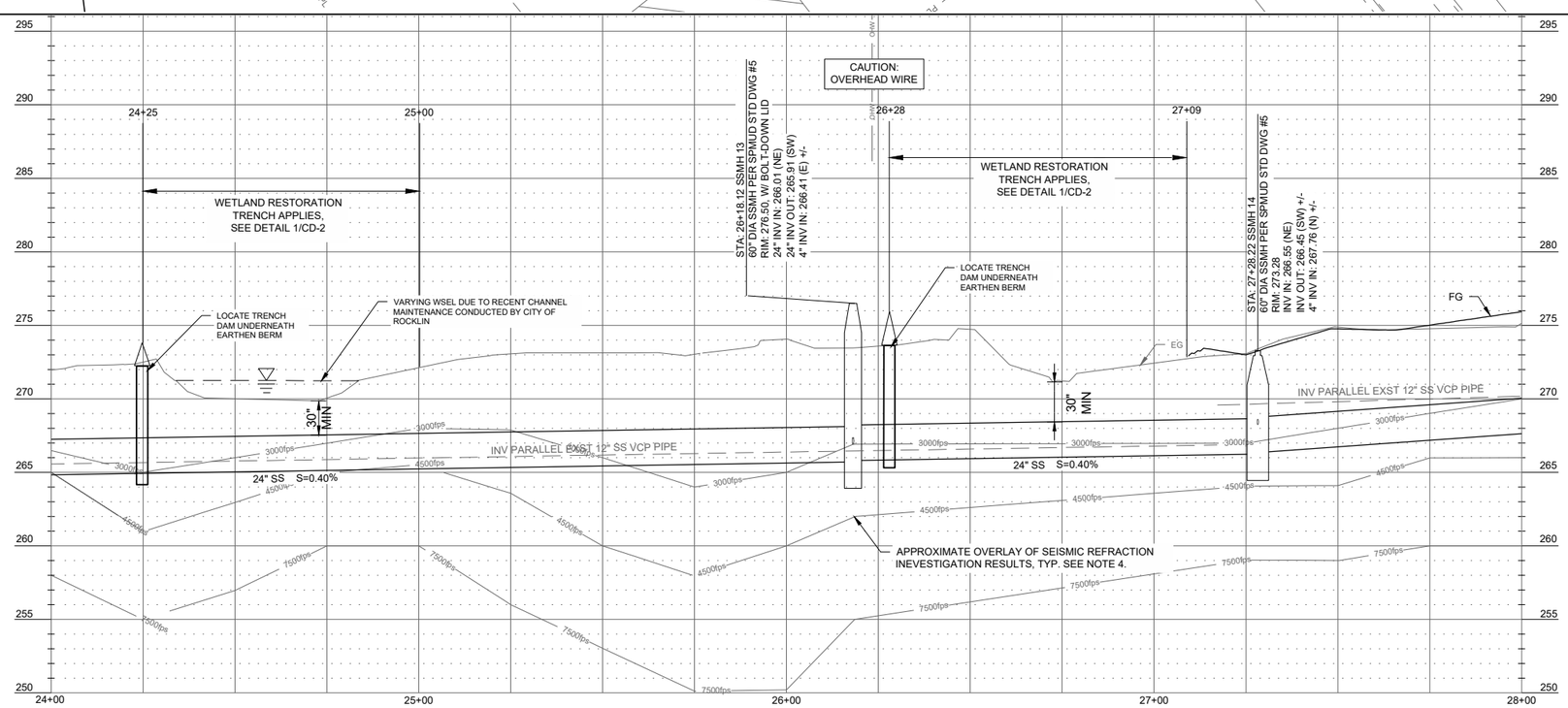

PROFILE

HORIZ: 1"=20'
VERT: 1"=5'

CONSTRUCTION NOTES:

1. DURING CONSTRUCTION, THE CONTRACTOR SHALL MAINTAIN ACCESS TO RESIDENTS AND PERTAINING SERVICE PERSON AT ALL TIMES.
2. DURING THE CONSTRUCTION, THE CONTRACTOR SHALL MAINTAIN FLOWS IN THE EXISTING SEWER PIPE AT ALL TIMES. CONTRACTOR MAY BYPASS SEWAGE FLOWS AS PER SPECS 011130 AND 01550. NOTIFY HOMEOWNER PRIOR TO BYPASS PUMPING.
3. CONTRACTOR SHALL COMPLY WITH CULTURAL RESOURCE DISCOVERY REQUIREMENTS PER NOTE D.1/G-2. CONTRACTOR SHALL PROVIDE ACCESS FOR ARCHAEOLOGIST AND CULTURAL MONITOR TO OBSERVE GROUND DISTURBING ACTIVITIES, AND UPON REQUEST, SHALL ACCOMMODATE ARCHAEOLOGIST BY SETTING ASIDE TRENCH SPOILS FOR ASSESSMENT FOR A MAXIMUM OF 15 MINUTES. THE CONTRACTOR SHALL, AT NO COST TO THE OWNER, ACCOMMODATE THE ARCHAEOLOGIST HALTING EXCAVATION WITHIN 100 LF OF A DISCOVERY PER SPECS 01130 TO IMPLEMENT THE PROJECT HPTP.
4. CONTRACTOR SHALL NOTIFY THE OWNER PRIOR TO COMMENCING ROCK EXCAVATION IN ACCORDANCE WITH SPECS 01130, 02300, AND 02310. ROCK VELOCITIES DEPICTED ON THE PIPELINE PROFILES ARE THE ENGINEER'S BEST ESTIMATION OF CONDITIONS THAT MAY BE ENCOUNTERED BASED ON THE PROJECT REFRACTION SEISMIC INVESTIGATION REPORT IN APPENDIX A. NOT ONLY MAY ROCK EXCAVATION BE REQUIRED AT UNEXPECTED LOCATIONS ALONG THE ALIGNMENT BUT THERE WILL LIKELY ALSO BE AREAS ALONG THE ALIGNMENT WHERE ROCK EXCAVATION WAS ASSUMED BUT ULTIMATELY THE EXCAVATION IS ABLE TO BE ACCOMPLISHED WITH LESS EFFORT. FOR THESE REASONS THE CONTRACTOR SHALL ASSUME THE ROCK EXCAVATION VOLUME STATED IN BID ITEM #13 IS THE TOTAL VOLUME THAT WILL BE ENCOUNTERED OVER THE COURSE OF EXCAVATION FOR THE ENTIRETY OF THE PROJECT.
5. CONTRACTOR SHALL REPLACE UP TO 20' OF EXST 4" SS PIPE AND RECONNECT TO NEW SSMH. SEE DETAIL 3/CD-2.
6. CONTRACTOR MUST POTHOLE ALL APPLICABLE EXISTING UTILITIES AS PER SPECS 01130.

NO.	DATE	REVISION	BY	APV'D
1	02/19/20	ADDENDUM REVISIONS IN CONFORMED SET	MT	TL

DESIGN M FISHER
DRAWN T LEWIS
CHECKED M FISHER
APPROVED M FISHER

WATERWORKS ENGINEERS
1322 Blue Oaks Blvd, Suite 300 • Roseville, CA 95678 • 916-780-2888

SOUTH PLACER MUNICIPAL UTILITY DISTRICT
FOOTHILLS TRUNK SEWER REPLACEMENT PROJECT

CIVIL
PLAN & PROFILE
STA 24+00 TO 28+00

REGISTERED PROFESSIONAL ENGINEER
MICHAEL P. FISHER
No. C37194
CIVIL
STATE OF CALIFORNIA
10-8-2019

DATE FEBRUARY 2020
PROJECT NUMBER 14-068
DRAWING NUMBER C-4
SHEET NUMBER 15

JOB NUMBER: 14-068 FILENAME: 1468D-C.DWG PLOT DATE: 21-Feb-20 PLOT TIME: 12:08:10

L:\CAD\PROJECTS\14-068 SPMUD FOOTHILLS TRUNK SEWER_(S)\DRAWINGS\DELIVERABLES\WORKING ALIGNMENTS\FINAL CONTRACT SET\1468D-C.DWG

C-5 LINE TABLE						
LINE NO.	LENGTH	DIRECTION	START STA	END STA	START N/E	END N/E
L10	224.815'	N33° 33' 15.16"E	27+28.25'	29+53.06'	2048647.0313',6784581.6006'	2048834.3835',6784705.8614'
L11	367.056'	N74° 06' 14.96"E	29+53.06'	33+20.12'	2048834.3835',6784705.8614'	2048934.9164',6785058.8819'

20 0 20 40 FEET
SCALE 1"=20'

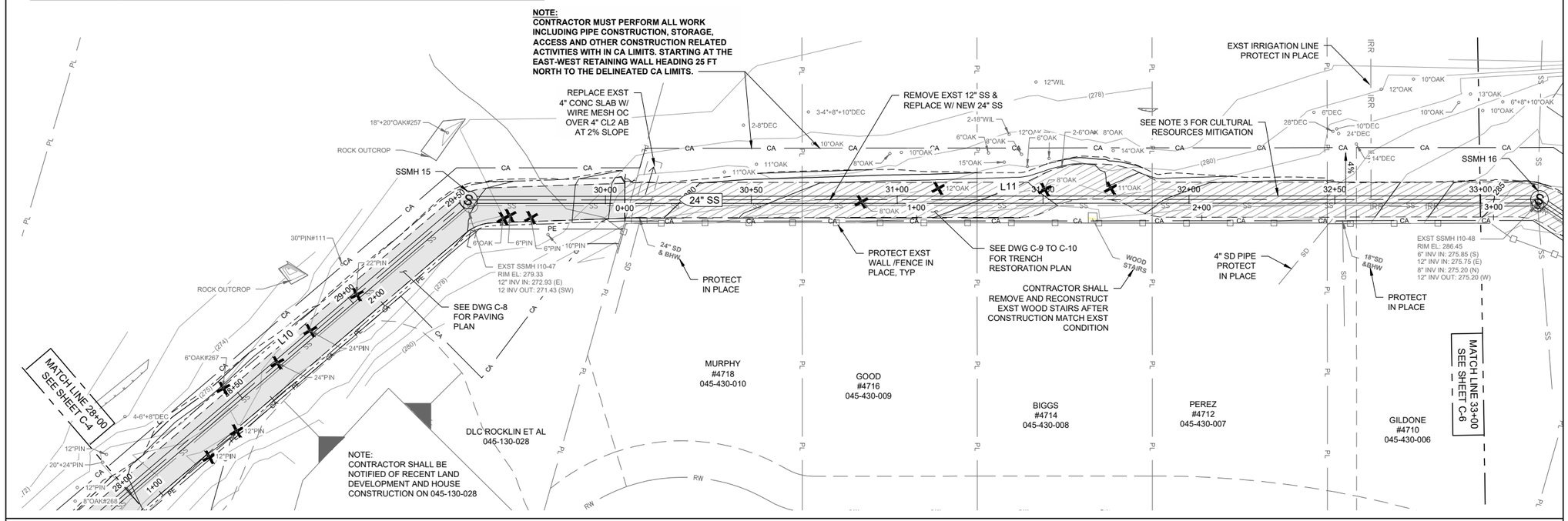

PROFILE

HORIZ: 1"=20'
VERT: 1"=4'

CONSTRUCTION NOTES:

1. DURING CONSTRUCTION, THE CONTRACTOR SHALL MAINTAIN ACCESS TO RESIDENTS AND PERTAINING SERVICE PERSON AT ALL TIMES.
2. DURING THE CONSTRUCTION, THE CONTRACTOR SHALL MAINTAIN FLOWS IN THE EXISTING SEWER PIPE AT ALL TIMES. CONTRACTOR MAY BYPASS SEWAGE FLOWS AS PER SPECS 01130 AND 01550. NOTIFY HOMEOWNER PRIOR TO BYPASS PUMPING.
3. CONTRACTOR SHALL COMPLY WITH CULTURAL RESOURCE DISCOVERY REQUIREMENTS PER NOTE D.1/G-2. CONTRACTOR SHALL PROVIDE ACCESS FOR ARCHAEOLOGIST AND CULTURAL MONITOR TO OBSERVE GROUND DISTURBING ACTIVITIES, AND UPON REQUEST, SHALL ACCOMMODATE ARCHAEOLOGIST BY SETTING ASIDE TRENCH SPOILS FOR ASSESSMENT FOR A MAXIMUM OF 15 MINUTES. THE CONTRACTOR SHALL, AT NO COST TO THE OWNER, ACCOMMODATE THE ARCHAEOLOGIST HALTING EXCAVATION WITHIN 100 LF OF A DISCOVERY PER SPECS 01130 TO IMPLEMENT THE PROJECT HPTP.
4. CONTRACTOR SHALL NOTIFY THE OWNER PRIOR TO COMMENCING ROCK EXCAVATION IN ACCORDANCE WITH SPECS 01130, 02300, AND 02310. ROCK VELOCITIES DEPICTED ON THE PIPELINE PROFILES ARE THE ENGINEER'S BEST ESTIMATION OF CONDITIONS THAT MAY BE ENCOUNTERED BASED ON THE PROJECT REFRACTION SEISMIC INVESTIGATION REPORT IN APPENDIX A. NOT ONLY MAY ROCK EXCAVATION BE REQUIRED AT UNEXPECTED LOCATIONS ALONG THE ALIGNMENT BUT THERE WILL LIKELY ALSO BE AREAS ALONG THE ALIGNMENT WHERE ROCK EXCAVATION WAS ASSUMED BUT ULTIMATELY THE EXCAVATION IS ABLE TO BE ACCOMPLISHED WITH LESS EFFORT. FOR THESE REASONS THE CONTRACTOR SHALL ASSUME THE ROCK EXCAVATION VOLUME STATED IN BID ITEM #13 IS THE TOTAL VOLUME THAT WILL BE ENCOUNTERED OVER THE COURSE OF EXCAVATION FOR THE ENTIRETY OF THE PROJECT.
5. CONTRACTOR MUST POTHOLE ALL APPLICABLE EXISTING UTILITIES AS PER SPECS 01130.

REGISTERED PROFESSIONAL ENGINEER MICHAEL P. FISHER No. C67194 CIVIL STATE OF CALIFORNIA
10-8-2019

DESIGN M FISHER
DRAWN T LEWIS
CHECKED M FISHER
APPROVED M FISHER

SOUTH PLACER MUNICIPAL UTILITY DISTRICT
FOOTHILLS TRUNK SEWER REPLACEMENT PROJECT

CIVIL
PLAN & PROFILE
STA 28+00 TO 33+50

DATE FEBRUARY 2020
PROJECT NUMBER 14-068
DRAWING NUMBER C-5
SHEET NUMBER 16

WATERWORKS ENGINEERS
1322 Blue Oaks Blvd, Suite 300 • Roseville, CA 95678 • 916-780-2888

L:\CAD\PROJECTS\14-068 SPMUD FOOTHILLS TRUNK SEWER_(S)\DRAWINGS\DELIVERABLES\WORKING ALIGNMENTS\FINAL CONTRACT SET\1468D-C.DWG

C-6 LINE TABLE						
LINE NO.	LENGTH	DIRECTION	START STA	END STA	START N/E	END N/E
L11	367.056'	N74° 06' 14.96"E	29+53.06'	33+20.12'	N2048934.38, E6784705.86	N2048934.92, E 6785058.88
L12	161.200'	N72° 06' 16.18"E	33+20.12'	34+81.32'	N2048934.92, E6785058.88	N2048885.38, E6785212.28
L13	212.644'	N89° 06' 50.14"E	34+81.32'	36+93.99'	N2048885.38, E6785212.28	N2048888.66, E6785424.93
L14	34.379'	N75° 29' 02.76"E	36+93.99'	37+28.37'	N204888.66, E6785424.93	N2048897.28, E6785458.21

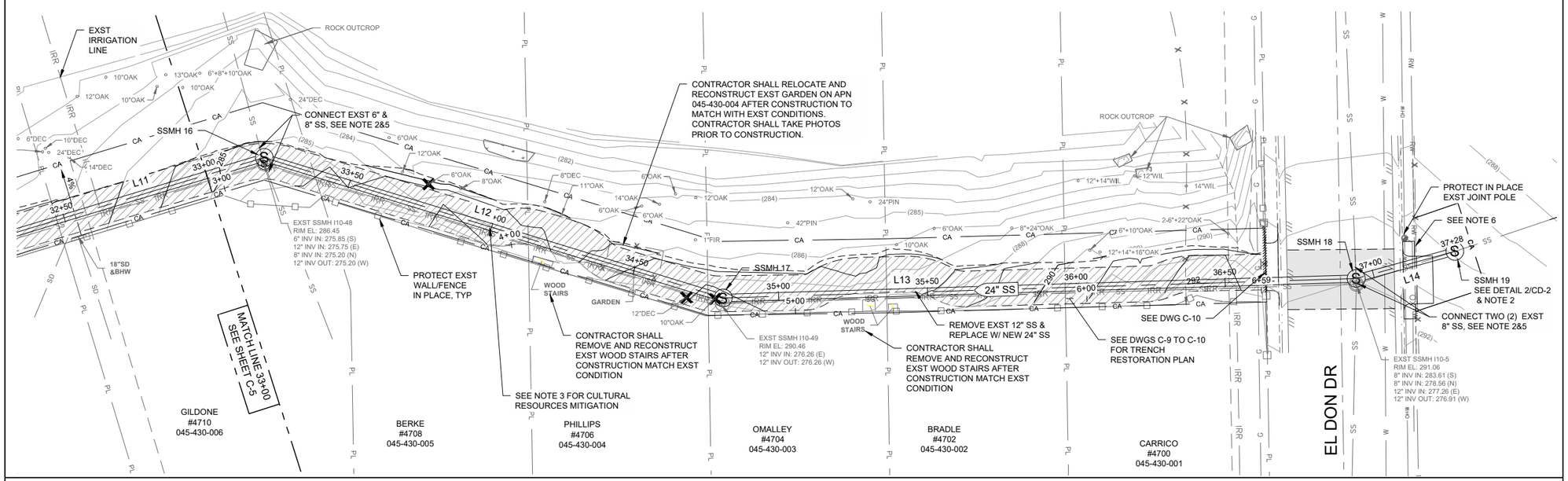

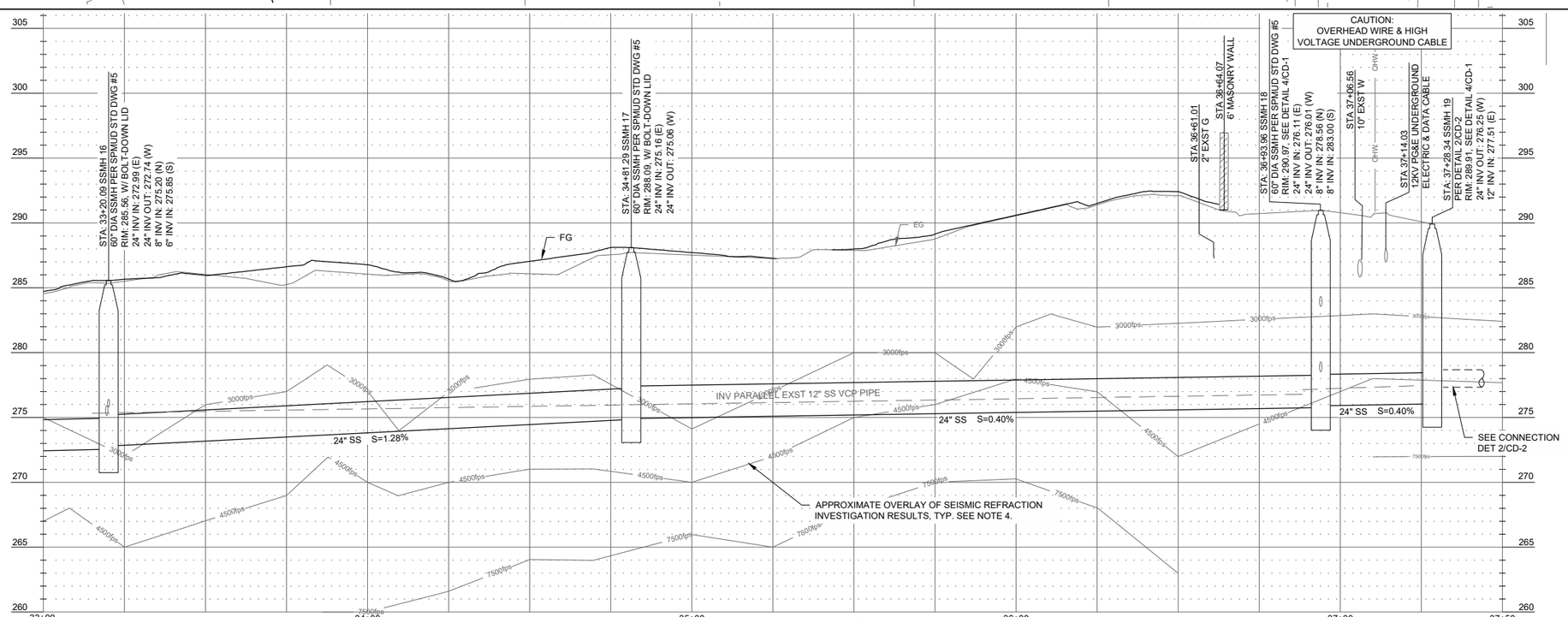

PROFILE

HORIZ: 1"=20'
VERT: 1"=5'

CONSTRUCTION NOTES:

1. DURING CONSTRUCTION, THE CONTRACTOR SHALL MAINTAIN ACCESS TO RESIDENTS AND PERTAINING SERVICE PERSON AT ALL TIMES.
2. DURING THE CONSTRUCTION, THE CONTRACTOR SHALL MAINTAIN FLOWS IN THE EXISTING SEWER PIPE AT ALL TIMES. CONTRACTOR MAY BYPASS SEWAGE FLOWS AS PER SPECS 01130 AND 01550. NOTIFY HOMEOWNER PRIOR TO BYPASS PUMPING.
3. CONTRACTOR SHALL COMPLY WITH CULTURAL RESOURCE DISCOVERY REQUIREMENTS PER NOTE D.1/G-2. CONTRACTOR SHALL PROVIDE ACCESS FOR ARCHAEOLOGIST AND CULTURAL MONITOR TO OBSERVE GROUND DISTURBING ACTIVITIES, AND UPON REQUEST, SHALL ACCOMMODATE ARCHAEOLOGIST BY SETTING ASIDE TRENCH SPOILS FOR ASSESSMENT FOR A MAXIMUM OF 15 MINUTES. THE CONTRACTOR SHALL, AT NO COST TO THE OWNER, ACCOMMODATE THE ARCHAEOLOGIST HALTING EXCAVATION WITHIN 100 LF OF A DISCOVERY PER SPECS 01130 TO IMPLEMENT THE PROJECT HPTP.
4. CONTRACTOR SHALL NOTIFY THE OWNER PRIOR TO COMMENCING ROCK EXCAVATION IN ACCORDANCE WITH SPECS 01130, 02300, AND 02310. ROCK VELOCITIES DEPICTED ON THE PIPELINE PROFILES ARE THE ENGINEER'S BEST ESTIMATION OF CONDITIONS THAT MAY BE ENCOUNTERED BASED ON THE PROJECT REFRACTION SEISMIC INVESTIGATION REPORT IN APPENDIX A. NOT ONLY MAY ROCK EXCAVATION BE REQUIRED AT UNEXPECTED LOCATIONS ALONG THE ALIGNMENT BUT THERE WILL LIKELY ALSO BE AREAS ALONG THE ALIGNMENT WHERE ROCK EXCAVATION WAS ASSUMED BUT ULTIMATELY THE EXCAVATION IS ABLE TO BE ACCOMPLISHED WITH LESS EFFORT. FOR THESE REASONS THE CONTRACTOR SHALL ASSUME THE ROCK EXCAVATION VOLUME STATED IN BID ITEM #13 IS THE TOTAL VOLUME THAT WILL BE ENCOUNTERED OVER THE COURSE OF EXCAVATION FOR THE ENTIRETY OF THE PROJECT.
5. CONTRACTOR SHALL REPLACE UP TO 5' OF EXST 6" OR 8" SS PIPE AND RECONNECT TO NEW SSMH. SEE DETAIL 3/CD-2. CONTRACTOR SHALL USE INSIDE DROP CONNECTION TO CONNECT TWO 8" SS ON EL DON DRIVE AS PER SPMUD STD DWG #7.
6. CONTRACTOR SHALL REPLACE ANY DAMAGED EXISTING FENCE AND PIPE GATE AFTER CONSTRUCTING THIS SECTION OF PIPE PER SPECS 02830.
7. CONTRACTOR MUST POTHOLE ALL APPLICABLE EXISTING UTILITIES AS PER SPECS 01130.

DESIGN M FISHER
DRAWN T LEWIS
CHECKED M FISHER
APPROVED M FISHER

WATERWORKS ENGINEERS
1322 Blue Oaks Blvd, Suite 300 • Roseville, CA 95678 • 916-780-2888

SOUTH PLACER MUNICIPAL UTILITY DISTRICT
FOOTHILLS TRUNK SEWER REPLACEMENT PROJECT

CIVIL
PLAN & PROFILE
STA 33+00 TO 37+22

REGISTERED PROFESSIONAL ENGINEER MICHAEL P. FISHER No. C 67194 CIVIL STATE OF CALIFORNIA
10-8-2019

DATE FEBRUARY 2020
PROJECT NUMBER 14-068
DRAWING NUMBER C-6
SHEET NUMBER 17

PAVEMENT LIMITS TABLE

ROAD NAME	AVG/CALC WIDTH	LENGTH	AREA	ROAD SECTION AB	ROAD SECTION AC	REFERENCE DWG	BID ITEM	COMMENTS AND DETAILS
AGUILAR RD	6'	323'	6'X323' = 1,938 SF	6"	6"	C-7	6A	SEE DET 2/CD-1, ASSUM 4' WIDE TRENCH W/ 1' ON BOTH SIDES
AGUILAR RD	18.3'	323'	18.3'X323' = 5,911 SF	N/A	2"	C-7	6C	SEE DET 2/CD-1, GRIND EXST 2" AC AND PLACE 2' AC OVERLAY
ARROWHEAD DR	20.8'	256'	20.8'X256' = 5,325 SF	6"	2"	C-7	6B	SEE DETAIL 1/CD-1
PRIVATE DR	11'	273'	11'X273' = 3,003 SF	6"	2"	C-7	6B	SEE DETAIL 1/CD-1
JS-1 PAVED RD	17.4'	257'	17.4'X257' = 4,471.8 SF	8"	3"	C-7	6B	
GLEFFE SS TRENCH	2'	114'	2'X114' = 228 SF	6"	2"	C-7	6B	SEE DETAIL 1/CD-1

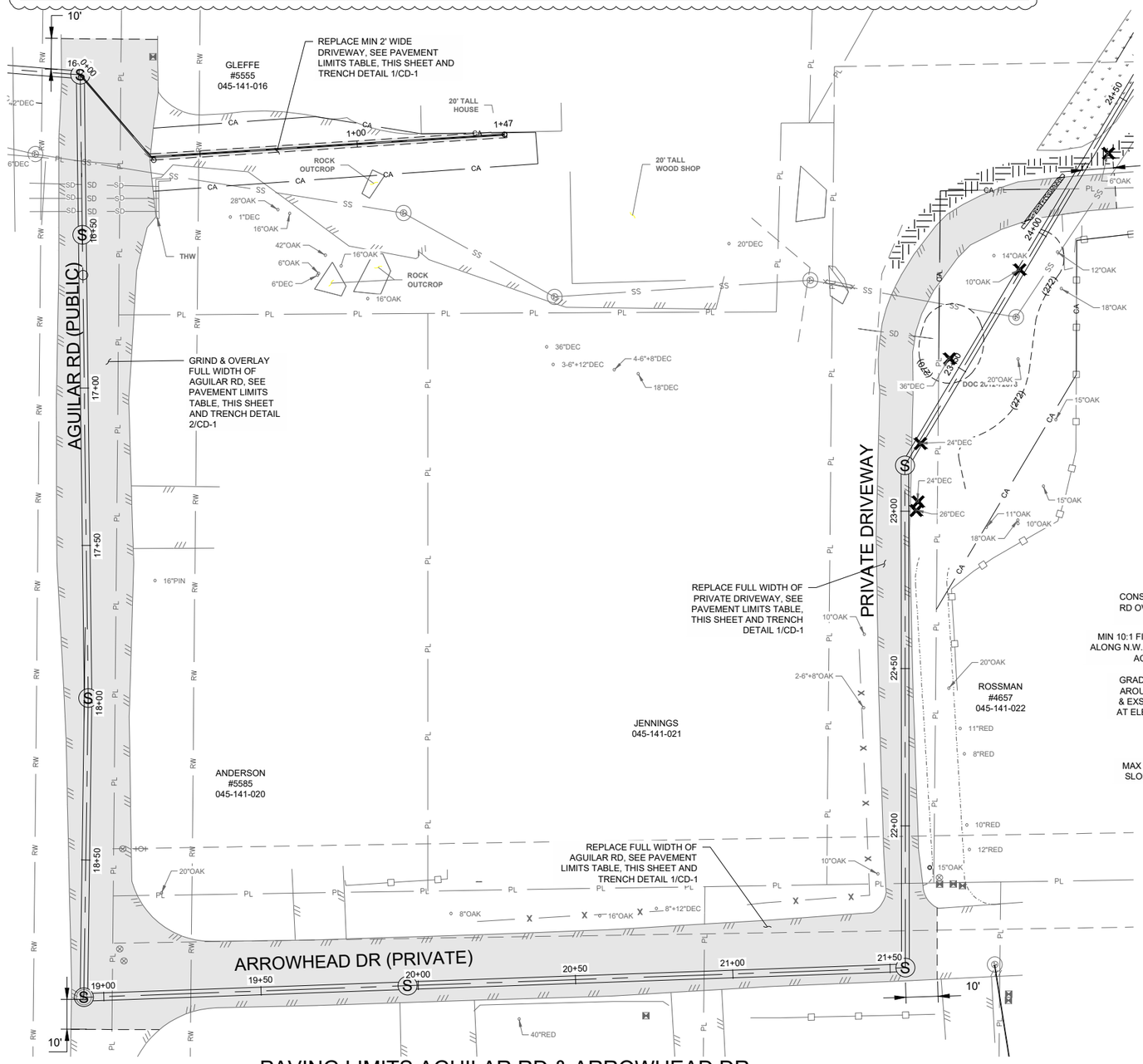

PAVING LIMITS AGUILAR RD & ARROWHEAD DR

1"=20'

20 0 20 40 FEET

SCALE 1"=20'

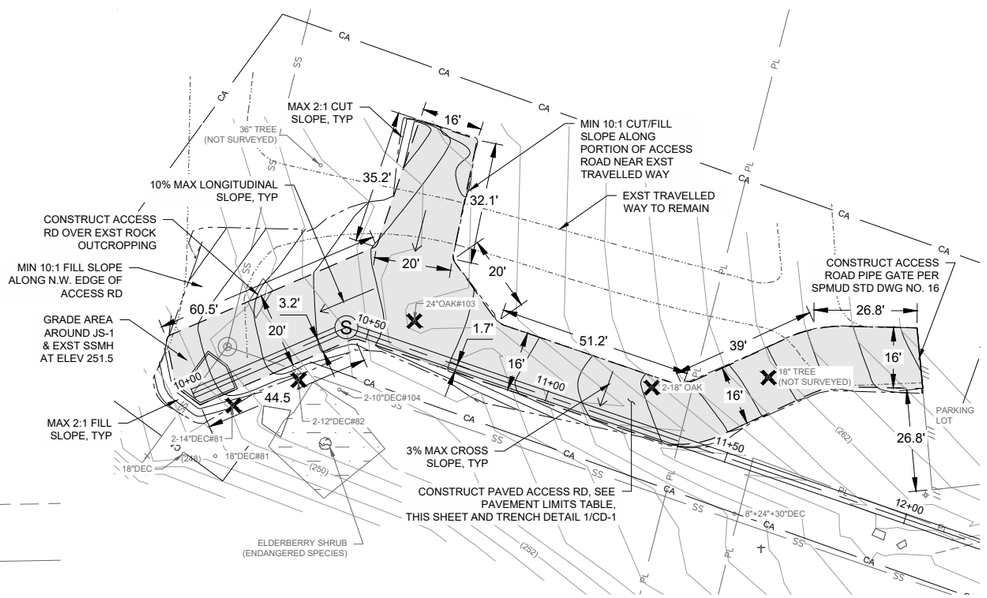

GRADING & PAVEMENT PLAN JS-1

1"=20'

NO.	DATE	REVISION	BY	APV'D
1	02/18/20	ADDENDUM REVISIONS IN CONFORMED SET	MT	TL

DESIGN M FISHER
DRAWN T LEWIS
CHECKED M FISHER
APPROVED M FISHER

SOUTH PLACER MUNICIPAL UTILITY DISTRICT

WATERWORKS ENGINEERS
1322 Blue Oaks Blvd, Suite 300 • Roseville, CA 95678 • 916-790-2888

SOUTH PLACER MUNICIPAL UTILITY DISTRICT
FOOTHILLS TRUNK SEWER REPLACEMENT PROJECT

CIVIL
GRADING & PAVING PLAN 1

REGISTERED PROFESSIONAL ENGINEER MICHAEL T. FISHER No. C67194 CIVIL STATE OF CALIFORNIA
10-8-2019

DATE FEBRUARY 2020
PROJECT NUMBER 14-068
DRAWING NUMBER C-7
SHEET NUMBER 18

L:\CAD\PROJECTS\14-068 SPMUD FOOTHILLS TRUNK SEWER_(S)\DRAWINGS\DELIVERABLES\WORKING ALIGNMENTS\FINAL CONTRACT SET\1468D-C.DWG

JOB NUMBER: 14-068 FILENAME: 1468D-C.DWG PLOT DATE: 24-Feb-20 PLOT TIME: 08:45:16

PAVEMENT LIMITS TABLE								
ROAD NAME	AVG/CALC WIDTH	LENGTH	AREA	ROAD SECTION AB	ROAD SECTION AC	REFERENCE DWG	BID ITEM	COMMENTS AND DETAILS
ACCESS ROAD	12'	297'	12'X297' = 3,564 SF	8"	3"	C-8	6B	SEE DET 1/CD-1

1

C-8 LINE TABLE						
LINE NO.	LENGTH	DIRECTION	START STA	END STA	START N/E	END N/E
L1	20.71'	N42° 26' 37"E	00+00.00'	00+20.71'	N2048627.55, E6784574.21	N2048642.86, E 6784588.15
L2	216.45'	N33° 57' 39"E	00+20.71'	02+37.16'	N2048642.85, E6784588.15	N2048823.11, E 6784707.98
C1	10.09'	RAD = 15	02+37.16'	02+47.25'	N2048823.11, E6784707.98	N2048829.09, E6784715.87
L3	45.4'	N72° 08' 23"E	02+47.25'	02+92.65'	N2048829.09, E6784715.87	N2048843.03, E6784759.13

*PROVIDE 15' RADIUS CURVATURE BETWEEN LINES

20 0 20 40 FEET
SCALE 1"=20'

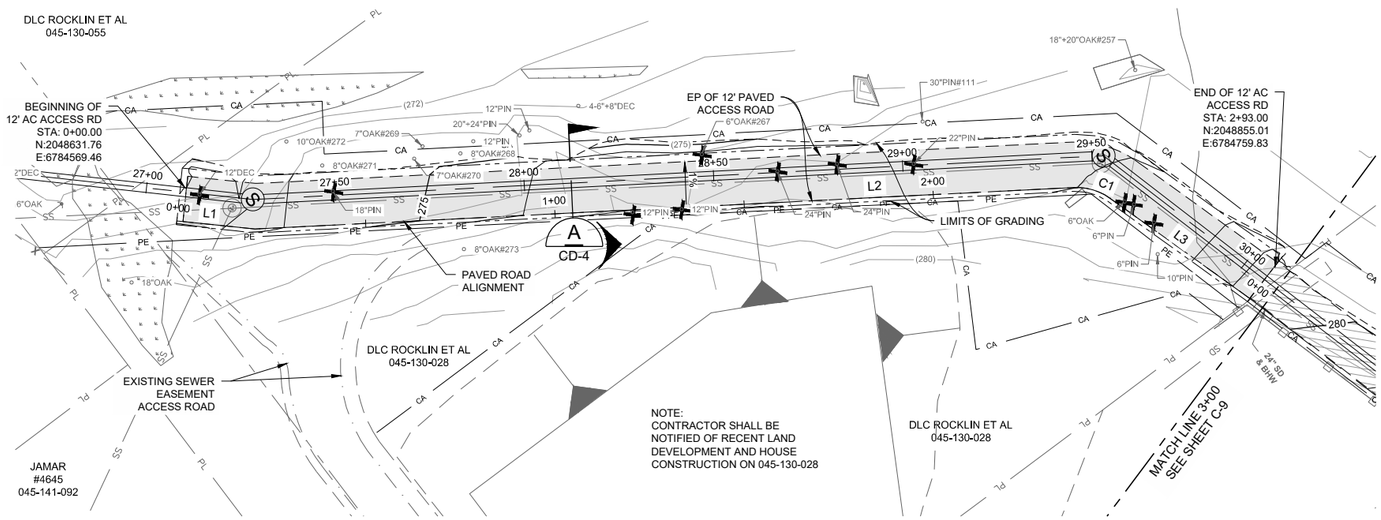

PLAN VIEW GRADING & PAVING LIMITS STA: 00+00 TO STA: 2+95.90

1"=20'

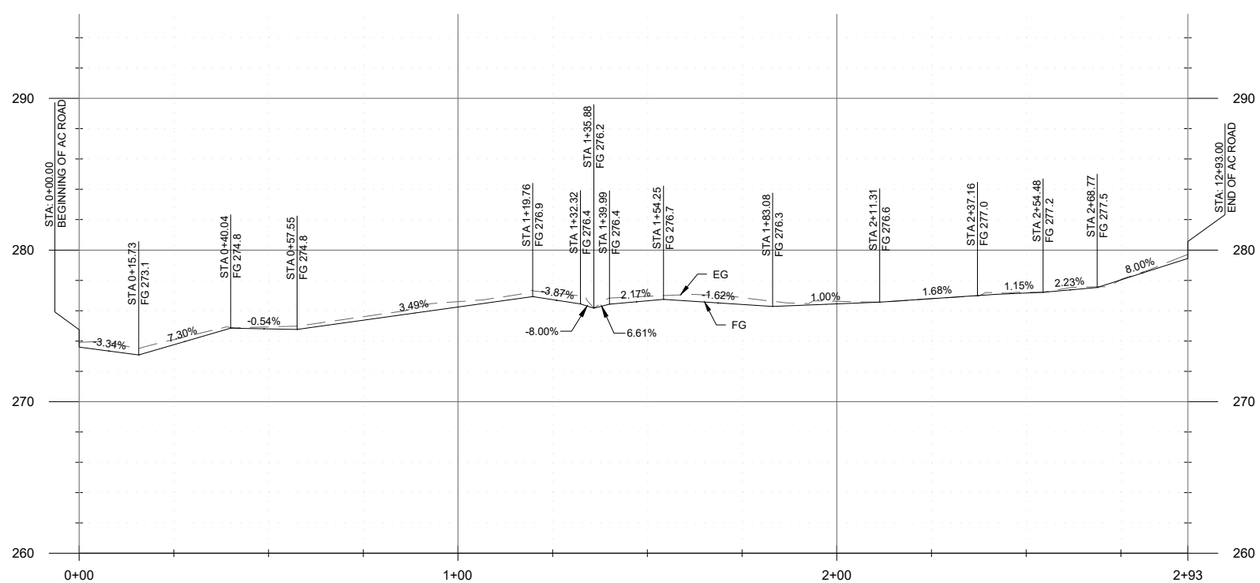

PROFILE

HORIZ 1"= 20'
VERT: 1"= 5'

NO.	DATE	REVISION	BY	APVD
1	02/18/20	ADDENDUM REVISIONS IN CONFORMED SET	MT	TL

DESIGN M FISHER
DRAWN T LEWIS
CHECKED M FISHER
APPROVED M FISHER

SOUTH PLACER MUD
SOUTH PLACER MUNICIPAL UTILITY DISTRICT
WATER • SEWER • RECLAMATION

WATERWORKS ENGINEERS
1322 Blue Oaks Blvd, Suite 300 • Roseville, CA 95678 • 916-790-2888

SOUTH PLACER MUNICIPAL UTILITY DISTRICT
FOOTHILLS TRUNK SEWER REPLACEMENT PROJECT

CIVIL
GRADING & PAVING PLAN 2
STA: 0+00 TO 2+95.90

REGISTERED PROFESSIONAL ENGINEER
MICHAEL T. FISHER
No. C67194
CIVIL
STATE OF CALIFORNIA
10-8-2019

DATE FEBRUARY 2020
PROJECT NUMBER 14-068
DRAWING NUMBER C-8
SHEET NUMBER 19

L:\CAD\PROJECTS\14-068 SPMUD FOOTHILLS TRUNK SEWER_(S)\DRAWINGS\DELIVERABLES\WORKING ALIGNMENTS\FINAL CONTRACT SET\1468D-C.DWG

JOB NUMBER: 14-068 FILENAME: 1468D-C.DWG PLOT DATE: 24-Feb-20 PLOT TIME: 08:46:15

PAVEMENT LIMITS TABLE

ROAD NAME	AVG/CALC WIDTH	LENGTH	AREA	ROAD SECTION AB	ROAD SECTION AC	REFERENCE DWG	BID ITEM	COMMENTS AND DETAILS
ACCESS ROAD	12'	411'	12'X411' = 4,932 SF	6"	N/A	C-9	6D	PLACE 12' WIDE AB FOR TRENCH RESTORATION AS PER SECTION B/CD-4

1

C-9 LINE & CURVE TABLE

LINE NO.	LENGTH	DIRECTION	START STA	END STA	START N/E	END N/E
L4	135.76'	N74° 05' 13"E	0+00.00'	1+35.76'	N2048843.03,E6784759.13	N2048880.25,E6784889.69
C2	9.24'	RAD = 20	1+35.76'	1+45.00'	N2048880.25,E6784889.69	N2048884.71,E6784897.68
L5	4.55'	N47° 36' 54"E	1+45.00'	1+49.55'	N2048884.71,E6784897.68	N2048887.78,E6784901.05
C3	9.24'	RAD = 20	1+49.55'	1+58.79'	N2048887.78,E6784901.05	N2048892.24,E6784909.05
L6	5.59'	N74° 05' 13"E	1+58.79'	1+64.38'	N2048892.24,E6784909.05	N2048893.78,E6784914.43
C4	9.24'	RAD = 20	1+64.38'	1+73.62'	N2048893.78,E6784914.43	N2048894.20,E6784923.57
L7	4.55'	N79° 26' 28"E	1+73.62'	1+78.17'	N2048894.20,E6784923.57	N2048893.37,E6784928.05
C5	9.24'	RAD = 20	1+78.17'	1+87.41'	N2048893.37,E6784928.05	N2048893.80,E6784937.20
L8	120.39'	N74° 05' 12"E	1+87.41'	3+07.80'	N2048893.80,E6784937.20	N2048926.80,E6785052.99
C6	11.78'	RAD = 20	3+07.80'	3+19.58'	N2048926.80,E6785052.99	N2048926.61,E6785064.59
L9	71.03'	S72° 10' 03"E	3+19.58'	3+90.61'	N2048926.61,E6785064.59	N2048904.86,E6785132.21

*PROVIDE 20' RADIUS CURVATURE BETWEEN LINES

20 0 20 40 FEET
SCALE 1"=20'

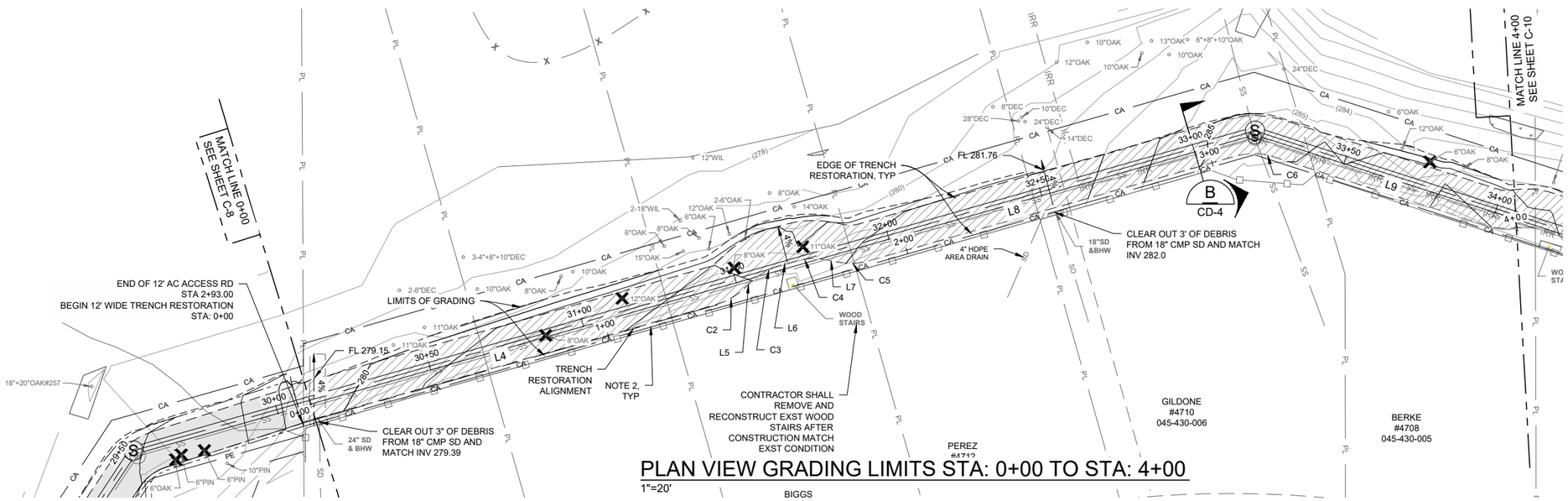

PLAN VIEW GRADING LIMITS STA: 0+00 TO STA: 4+00

1"=20'

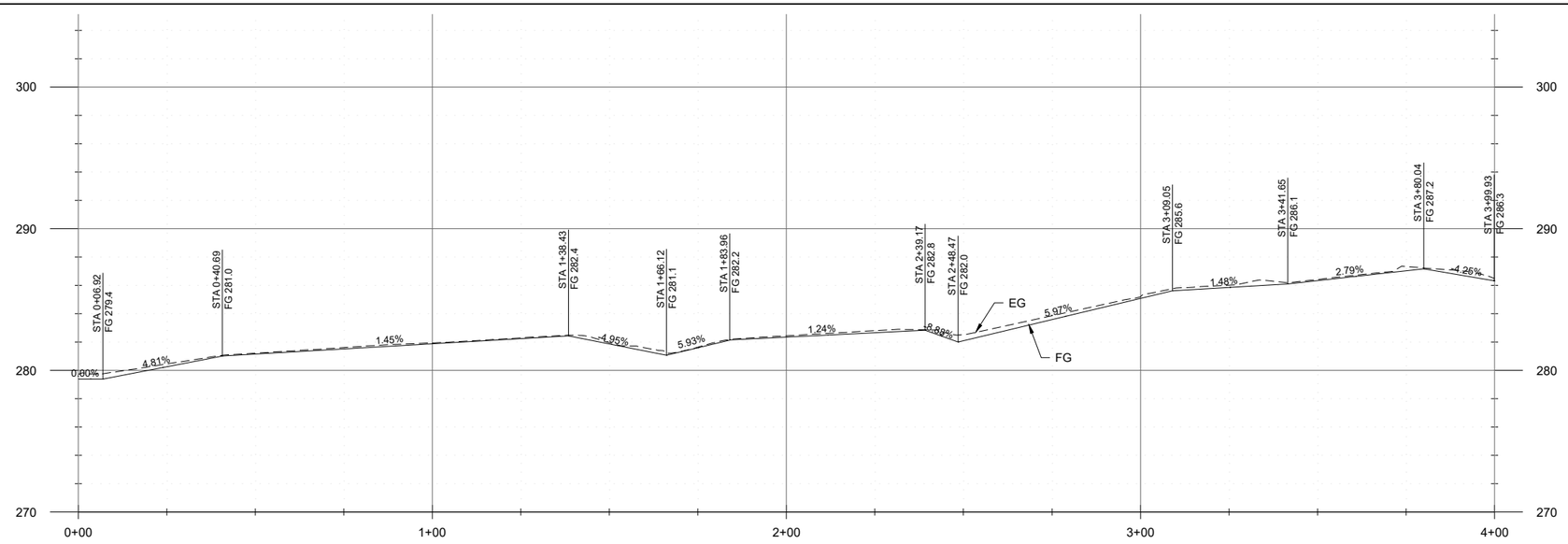

PROFILE

HORIZ 1"= 20'
VERT: 1"= 5'

CONSTRUCTION NOTES:

1. CONTRACTOR SHALL TRANSITION BETWEEN PAVED ACCESS ROAD TO 12" WIDE TRENCH RESTORATION USING COMPACTED CLS AB. CONTRACTOR SHALL GRADE THIS AREA SUCH THAT IT FLOWS AWAY FROM RESIDENCE.
2. CONTRACTOR SHALL NOT BLOCK OR PLUG EXISTING WEEP HOLES AND PROPERTY DRAINAGE

NO.	DATE	REVISION	BY	APV'D
1	02/18/20	ADDENDUM REVISIONS IN CONFORMED SET	MT	TL

DESIGN M FISHER
DRAWN T LEWIS
CHECKED M FISHER
APPROVED M FISHER

SOUTH PLACER MUNICIPAL UTILITY DISTRICT

WATERWORKS ENGINEERS
1222 Blue Oaks Blvd, Suite 300 • Roseville, CA 95678 • 916-790-2888

SOUTH PLACER MUNICIPAL UTILITY DISTRICT
FOOTHILLS TRUNK SEWER REPLACEMENT PROJECT

CIVIL
GRADING & PAVING PLAN 3
STA: 0+00 TO 4+00

REGISTERED PROFESSIONAL ENGINEER
MICHAEL J. FISHER
No. C67194
CIVIL
STATE OF CALIFORNIA
10-8-2019

DATE FEBRUARY 2020
PROJECT NUMBER 14-068
DRAWING NUMBER C-9
SHEET NUMBER 20

JOB NUMBER: 14-068 FILENAME: 1468D-C.DWG PLOT DATE: 24-Feb-20 PLOT TIME: 08:47:20

L:\CAD\PROJECTS\14-068 SPMUD FOOTHILLS TRUNK SEWER_(S)\DRAWINGS\DELIVERABLES\WORKING ALIGNMENTS\FINAL CONTRACT SET\1468D-C.DWG

PAVEMENT LIMITS TABLE

ROAD NAME	AVG/CALC WIDTH	LENGTH	AREA	ROAD SECTION AB	ROAD SECTION AC	REFERENCE DWG	BID ITEM	COMMENTS AND DETAILS
ACCESS RD	12'	251'	12'X251' X 3,012 SF	6"	N/A	C-10	6D	PLACE 12' WIDE AB FOR TRENCH RESTORATION AS PER SECTION B/CD-4
EL DON DR	36'	20'	36'X20' = 720 SF	8"	3"	C-10	6A	PLACE TYPE II SLURRY SEAL; OVER NEW PAVEMENT. SEE DET 2/CD-1

1

C-10 LINE & CURVE TABLE

LINE NO.	LENGTH	DIRECTION	START STA	END STA	START N/E	END N/E
C7	7.62'	RAD = 20	3+90.61'	3+98.27'	N2048904.86,E6785132.21	N2048904.05,E6785139.75
L10	1.44'	N83° 08' 05.62"E	3+98.27'	3+99.72'	N2048904.05,E6785139.75	N2048904.21,E6785141.19
C8	8.45'	RAD = 15	3+99.72'	4+08.17'	N2048904.21,E6785141.19	N2048903.59,E6785149.52
L11	10.19'	S72°06'01.92"E	4+08.17'	4+09.58'	N2048903.59,E6785149.52	N2048900.46,E6785159.22
C9	7.17'	RAD = 20	4+09.58'	4+16.75'	N2048900.46,E6785159.22	N2048869.98,E6785165.42
L12	1.28'	S45°43'54.44"E	4+16.75'	4+18.03'	N2048869.98,E6785165.42	N2048896.08,E6785166.34
C10	9.92'	RAD = 20	4+18.03'	4+27.95'	N2048896.08,E6785166.34	N2048891.15,E6785166.34
L13	31.10'	S72°10'12.18"E	4+27.95'	4+59.05'	N2048891.15,E6785166.34	N2048881.63,E6785204.44
C11	6.20'	RAD = 20	4+59.05'	4+65.25'	N2048881.63,E6785204.44	N2048880.67,E6785210.55
L14	28.42'	S89°56'49.50"E	4+65.25'	4+93.67'	N2048880.67,E6785210.55	N2048880.64, E6785238.97
C12	7.02'	RAD = 15	4+93.67'	5+00.69'	N2048880.64, E6785238.97	N2048882.09,E6785245.78
L15	1.41'	N62° 37' 53"E	5+00.69'	5+02.10'	N2048882.09,E6785245.78	N2048882.74,E6785247.03
C13	11.52'	RAD = 20	5+02.10'	5+13.62'	N2048882.74,E6785247.03	N2048886.12,E6785257.88
L16	15.44'	N89° 06' 59"E	5+13.62'	5+29.07'	N2048886.12,E6785257.88	N2048886.36,E6785273.32
C14	10.77'	RAD = 20	5+29.07'	5+39.86'	N2048886.36,E6785273.32	N2048883.69,E6785283.62
L17	1.49'	S62° 10' 78"E	5+39.86'	5+41.36'	N2048883.69,E6785283.62	N2048882.99,E6785284.94
C15	9.22'	RAD = 20	5+41.36'	5+50.58'	N2048882.99,E6785284.94	N2048881.02,E6785293.87
L18	72.67'	N86° 47'35.65"E	5+50.58'	6+23.25'	N2048881.02,E6785293.87	N2048885.08,E6785366.42
C16	1.12'	RAD=20	6+23.25'	6+24.62'	N2048885.08,E6785366.42	N2048885.11,E6785367.54
L19	25.59'	N90° 00'00.00"E	6+24.62'	6+50.21'	N2048885.11,E6785367.54	N2048885.11,E6785393.13

*PROVIDE 15' RADIUS & 20' CURVATURE BETWEEN LINES

20 0 20 40 FEET
SCALE 1"=20'

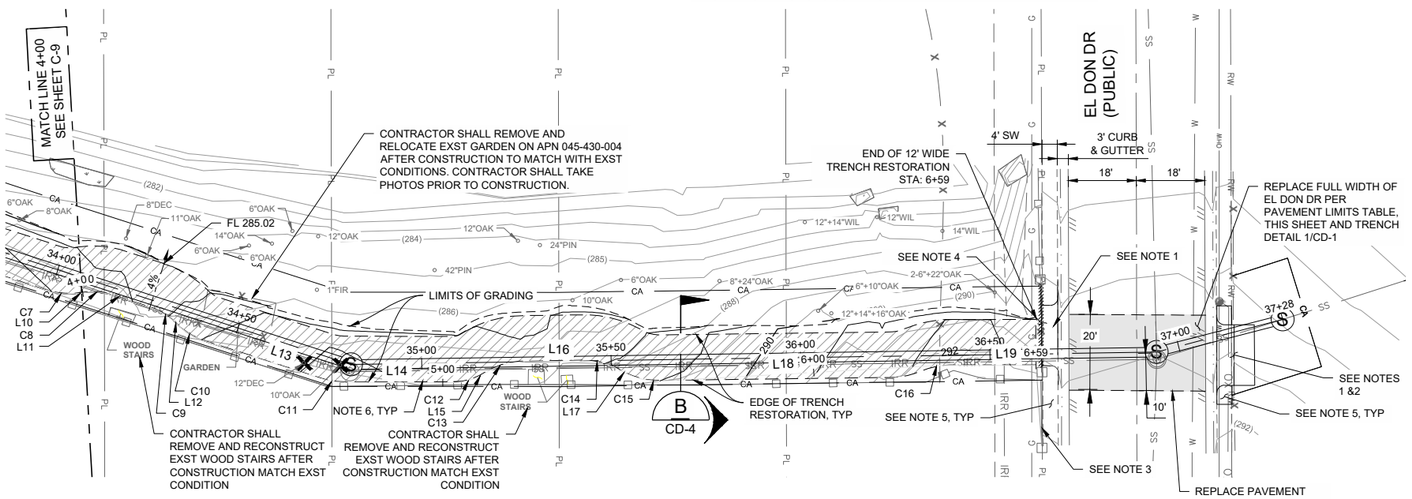

GRADING AND PAVING LIMITS STA: 4+00 TO STA: 6+59

1"=20'

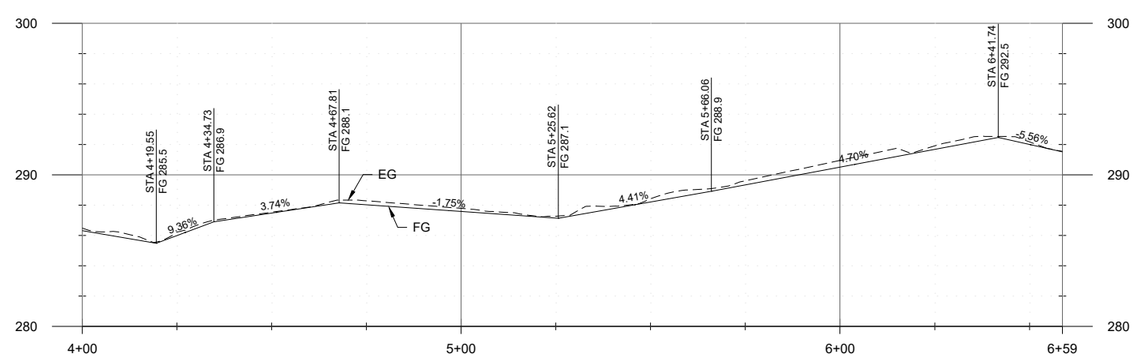

PROFILE

HORIZ 1"= 20'
VERT: 1"= 5'

CONSTRUCTION NOTES:

1. INSTALL 16 FT WIDE COMM DRIVEWAY PER DETAIL 3-19 ON DWG CD-4.
2. REMOVE MIN 36 FT OF EXST FENCE AND REPLACE W/16 FT WIDE PIPE GATE PER SPMUD DETAIL 16 AND 10 FT OF CHAIN LINK FENCE PER SPECS 02830.
3. PROTECT 20 FT SECTION OF EXST 18 IN THICK MASONARY WALL IN PLACE INCASE IT IS DAMAGED, CONTRACTOR SHALL REPAIR PORTION OF WALL TO MATCH EXST. IF ENTIRE WALL CAN'T BE PROTECTED, REPLACE WITH 20 FT LONG SCREENED FENCE TO MATCH EXST. SEE DETAILS 2815 ON DWG SD-2.
4. REPLACE 24 FT OF EXST 18 IN THICK CMU WALL WITH 16 FT WIDE ROLLING GATE, TWO PILASTERS AND WROUGHT IRON FENCE MATCHING WITH EXST FENCE. GATE AND FENCE SHALL BE SCREENED AS PER DETAIL 2815 ON DWG SD-1 AND APPROVED BY SPMUD.
5. REPLACE CURB, GUTTER AND SIDEWALK PER CITY OF ROCKLIN STD DETAIL 3-15, TYPE 1A ON DWG CD-4.
6. CONTRACTOR SHALL NOT BLOCK OR PLUG EXISTING WEEP HOLES AND PROPERTY DRAINAGE

NO.	DATE	REVISION	BY	APV'D
1	02/18/20	ADDENDUM REVISIONS IN CONFORMED SET	MT	TL

DESIGN M FISHER
DRAWN T LEWIS
CHECKED M FISHER
APPROVED M FISHER

SOUTH PLACER MUNICIPAL UTILITY DISTRICT
SOUTH PLACER MUNICIPAL UTILITY DISTRICT
WATER • SEWER • RECYCLED WATER

WATERWORKS ENGINEERS
1322 Blue Oaks Blvd, Suite 300 • Roseville, CA 95678 • 916-790-2888

SOUTH PLACER MUNICIPAL UTILITY DISTRICT
FOOTHILLS TRUNK SEWER REPLACEMENT PROJECT

CIVIL
GRADING & PAVING PLAN 4
STA: 4+00 TO 6+59

REGISTERED PROFESSIONAL ENGINEER MICHAEL J. FISHER No. C67194 CIVIL STATE OF CALIFORNIA
10-8-2019

DATE FEBRUARY 2020
PROJECT NUMBER 14-068
DRAWING NUMBER C-10
SHEET NUMBER 21

L:\CAD\PROJECTS\14-068 SPMUD FOOTHILLS TRUNK SEWER_(S)\DRAWINGS\DELIVERABLES\WORKING ALIGNMENTS\FINAL CONTRACT SET\1468D-C.DWG

JOB NUMBER: 14-068 FILENAME: 1468D-C.DWG PLOT DATE: 24-Feb-20 PLOT TIME: 08:47:42

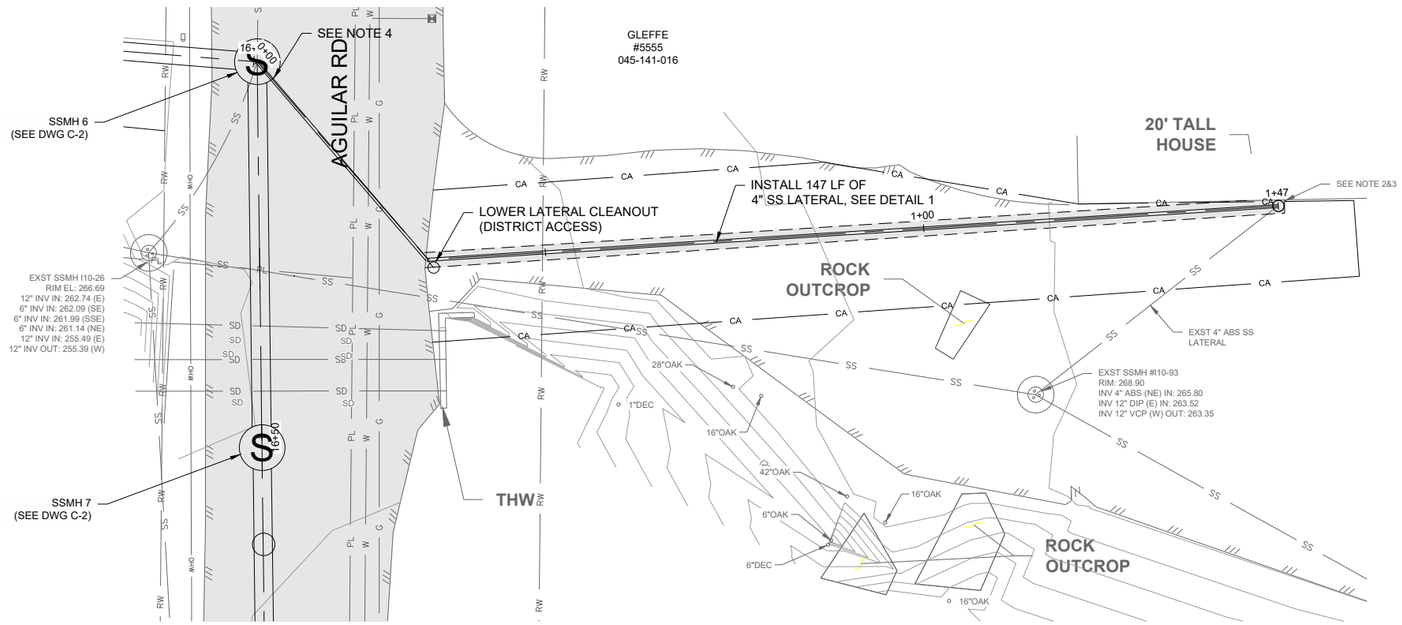

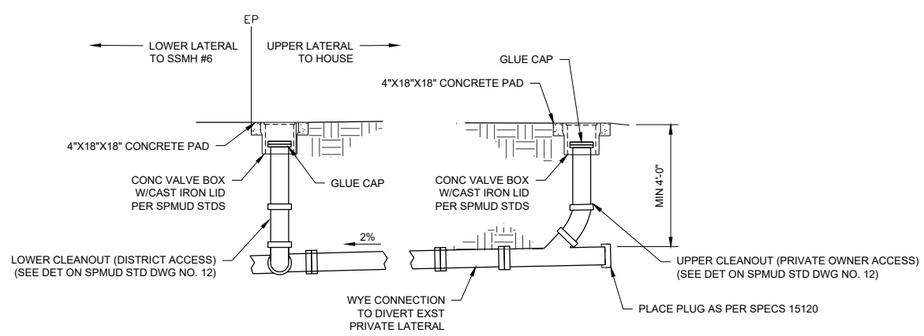

1 SS LATERAL
-- NTS

CONSTRUCTION NOTES:

1. CONTRACTOR SHALL COMPLY WITH ALL CONFINED SPACE ENTRY REQUIREMENTS BY CAL OSHA.
2. DURING THE CONSTRUCTION THE CONTRACTOR SHALL MAINTAIN FLOWS IN THE EXST SEWER PIPE AT ALL TIMES. CONTRACTOR MAY BYPASS SEWAGE FLOWS AS PER SPECS 01130 AND 01550. NOTIFY HOMEOWNER PRIOR TO BYPASS PUMPING.
3. CONTRACTOR SHALL LOCATE AND POTHOLE EXST LATERAL. CONNECT NEW SS LATERAL WITH 45 DEG WYE AND UPSTREAM SSCO AND REPAIR COUPLING.
4. CONNECT NEW 4" SS LATERAL WITH AN INSIDE DROP CONNECTION AS PER SPMUD STD DWG #7 INTO NEW SSMH.

DESIGN M FISHER
DRAWN T LEWIS
CHECKED M FISHER
APPROVED M FISHER

SOUTH PLACER MUNICIPAL UTILITY DISTRICT
SOUTH PLACER MUNICIPAL UTILITY DISTRICT
GENERAL MANAGER

WATERWORKS ENGINEERS
1322 Blue Oaks Blvd, Suite 300 • Roseville, CA 95678 • 916-790-2888

SOUTH PLACER MUNICIPAL UTILITY DISTRICT
FOOTHILLS TRUNK SEWER REPLACEMENT PROJECT

CIVIL DETAILS
PLAN & PROFILE
045-141-016 PROPERTY

REGISTERED PROFESSIONAL ENGINEER
MICHAEL J. FISHER
No. C67194
CIVIL
STATE OF CALIFORNIA
10-8-2019

DATE FEBRUARY 2020
PROJECT NUMBER 14-068
DRAWING NUMBER C-11
SHEET NUMBER 22

L:\CAD\PROJECTS\14-068 SPMUD FOOTHILLS TRUNK SEWER_(S)\DRAWINGS\DELIVERABLES\WORKING ALIGNMENTS\FINAL CONTRACT SET\1468D-C.DWG

JOB NUMBER: 14-068 FILENAME: 1468D-C.DWG PLOT DATE: 21-Feb-20 PLOT TIME: 12:25:42

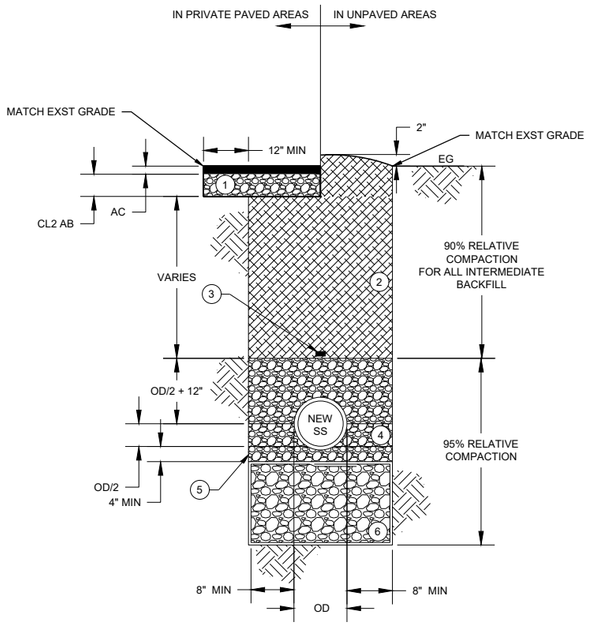

1 TRENCH DETAIL - PRIVATE ROAD

--- NTS

GENERAL NOTES

1. SHOVEL SLICE PIPE BEDDING MATERIAL UNIFORMLY UNDER PIPE IN HAUNCH AREA. SHOVEL SLICING SHALL BE COMPLETED BEFORE THE BEDDING IS BROUGHT UP TO THE PIPE SPRINGLINE.
2. IF UNSUITABLE AND SOFT OR WET MATERIAL EXIST, REMOVE EXISTING MATERIAL AND PLACE MINIMUM OF 18" OF 3/4" MAX CRUSHED ROCK WRAPPED WITH GEOTEXTILE FILTER FABRIC MATERIAL.
3. TRENCH SLOPE OR SHORING SHALL BE USED IN ACCORDANCE WITH CAL OSHA REQUIREMENTS.
4. SEE EARTHWORK SPECS 02300 FOR EARTHWORK, BACKFILL AND COMPACTION.
5. AB AND AC THICKNESSES VERY; SEE PAVEMENT LIMITS TABLES ON DRAWINGS C-7 THROUGH C-10. (1)

BACKFILL MATERIALS

(1) PAVED AREAS
ARROWHEAD DR, PRIVATE DR AND PAVED ACCESS ROAD, 95% DRIVEWAY RELATIVE COMPACTION. SEE TABLE ON DWG C-7 FOR PAVEMENT LIMITS.
UNPAVED AREAS
BACKFILL W/ MIN 6" NATIVE MATERIAL 90% RELATIVE COMPACTION AND AS SPECIFIED ON DWGS.

(2) INTERMEDIATE BACKFILL: NATIVE MATERIAL OR 3/4" CRUSHED ROCK AS PER SPECS 02300 AND AS REQUIRED BY SPMUD.

(3) PLACE AWG NO. 10 LOCATION WIRE ON CURVE SECTION OF PIPE BETWEEN SSMH TO SSMH AS PER SPECS 02300.

(4) PLACE DETECTABLE LOCATOR TAPE LABELED "CAUTION BURIED SEWER LINE BELOW " PER SPMUD REQUIREMENTS.

(5) PIPE BEDDING: 3/4" CRUSHED ROCK AS PER SPECS 02300 AND AS REQUIRED BY SPMUD.

(6) SOFT MATERIAL EXCAVATION: 18" MIN DEPTH OF 3/4" TO 1 1/2" CRUSHED ROCK WITH 12" MIN OVERLAP GEOTEXTILE FILTER FABRIC. SEE GEOTECHNICAL REPORT FOR FURTHER RECOMMENDATIONS.

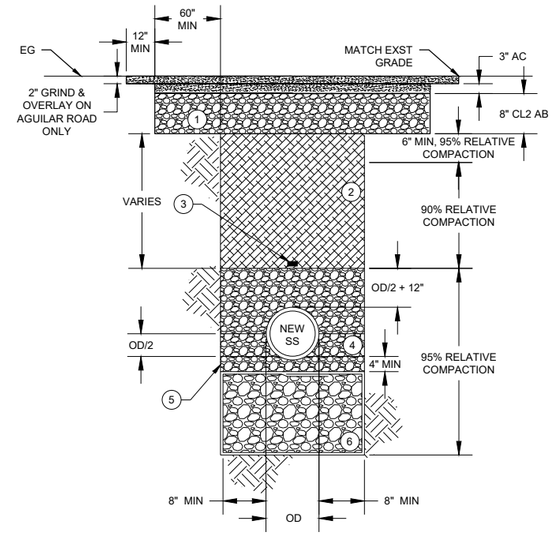

2 TRENCH DETAIL - PUBLIC ROAD

--- NTS

GENERAL NOTES

1. SHOVEL SLICE PIPE BEDDING MATERIAL UNIFORMLY UNDER PIPE IN HAUNCH AREA. SHOVEL SLICING SHALL BE COMPLETED BEFORE THE BEBBING IS BROUGHT UP TO THE PIPE SPRINGLINE.
2. IF UNSUITABLE AND SOFT OR WET MATERIAL EXIST, REMOVE EXISTING MATERIAL AND PLACE MINIMUM OF 18" OF 3/4" MAX CRUSHED ROCK WRAPPED WITH GEOTEXTILE FILTER FABRIC MATERIAL.
3. TRENCH SLOPE OR SHORING SHALL BE USED IN ACCORDANCE WITH CAL OSHA REQUIREMENTS.
4. SEE EARTHWORK SPECS 02300 FOR EARTHWORK, BACKFILL AND COMPACTION.
5. CONTRACTOR SHALL PLACE A TYPE II SLURRY SEAL OVER THE FULL WIDTH OF THE ROAD AS PER CITY OF ROCKLIN REQUIREMENTS. (1)
6. AB AND AC THICKNESSES VERY; SEE PAVEMENT LIMITS TABLES ON DRAWINGS C-7 THROUGH C-10.

BACKFILL MATERIALS

(1) PAVED AREAS
EL DON DR, AND AGUILAR RD 95% RELATIVE COMPACTION. SEE TABLE ON DWG C-7 FOR PAVEMENT LIMITS.

(2) INTERMEDIATE BACKFILL: 3/4" CRUSHED ROCK AS PER SPECS 02300 AND AS REQUIRED BY SPMUD.

(3) PLACE DETECTABLE LOCATOR TAP LABELED "CAUTION BURIED SEWER LINE BELOW " PER SPMUD REQUIREMENTS.

(4) INITIAL BACKFILL: 3/4" CRUSHED ROCK AS PER SPECS 02300 AND AS REQUIRED BY SPMUD.

(5) PIPE BEDDING: 3/4" CRUSHED ROCK AS PER SPECS 02300 AND AS REQUIRED BY SPMUD.

(6) SOFT MATERIAL EXCAVATION: 18" MIN DEPTH OF 3/4" TO 1 1/2" CRUSHED ROCK WITH 12" MIN OVERLAP GEOTEXTILE FILTER FABRIC. SEE GEOTECHNICAL REPORT FOR FURTHER RECOMMENDATIONS.

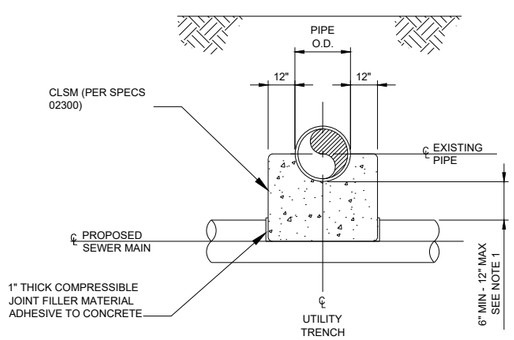

NOTES

1. CLSM ENCASEMENT IS REQUIRED IF SEPARATION BETWEEN EXISTING UTILITY AND PROPOSED SEWER PIPELINE IS LESS THAN 12 INCHES.
2. CLSM ENCASEMENT IS ALSO REQUIRED IF SPECIFICALLY CALLED OUT OUT ON PLANS.

3 UTILITY CROSSING DETAIL

--- NTS

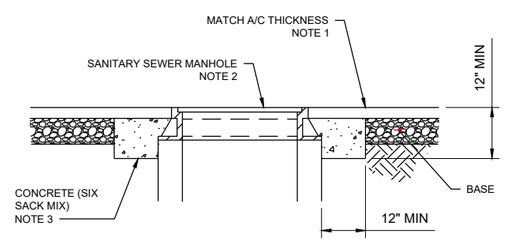

GENERAL NOTES:

1. INSTALL CONCRETE COLLARS PER THIS DETAIL IN ANY SSMH IN WHICH THE RIM ELEVATION SHOWN ON THE PLANS MATCHES THE EXISTING GRADE OR FUTURE GRADE. ELEVATED SSMH RIMS DO NOT REQUIRE A CONCRETE COLLAR.
2. MANHOLE SHALL BE CONSTRUCTED IN ACCORDANCE WITH SPMUD STANDARD DRAWINGS AND AS MODIFIED HEREIN.

4 CONCRETE COLLAR DETAIL

--- NTS

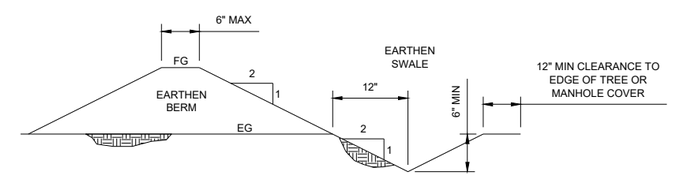

GENERAL NOTES:

1. EARTHEN BERM WILL BE CONSTRUCTED FROM EXCESS PROJECT SPOILS THAT CONSTITUTE COMMON FILL AS PER SPECS 02300.2.1.D AND MECHANICALLY COMPACTED TO 90% RELATIVE COMPACTION IN MAXIMUM 8" UNCOMPACTED LIFTS.
2. EARTHEN SWALE WILL MAINTAIN A MINIMUM DOWNWARD SLOPE OF 0.5% TOWARDS THE DRAINAGE ROAD CROSSING. THE DRAINAGE ROAD CROSSING MUST INCORPORATE A TAPERED INLET AND FLAIRED OUTFALL, OR INCORPORATE DRAINAGE INLET BOXES.

5 EARTHEN BERM AND SWALE DETAIL

--- NTS

REGISTERED PROFESSIONAL ENGINEER MICHAEL P. FISHER No. C057194 CIVIL STATE OF CALIFORNIA

10-8-2019

NO.	DATE		BY	APV'D
1	02/13/20	ADDENDUM REVISIONS IN CONFORMED SET	DL	TL
		REVISION		

DESIGN M FISHER
DRAWN T LEWIS
CHECKED M FISHER
APPROVED M FISHER

SOUTH PLACER MUNICIPAL UTILITY DISTRICT
SERVING PLACER COUNTY

WATERWORKS ENGINEERS
1322 Blue Oaks Blvd. Suite 300 • Roseville, CA 95678 • 916-790-2888

SOUTH PLACER MUNICIPAL UTILITY DISTRICT
FOOTHILLS TRUNK SEWER REPLACEMENT PROJECT

CIVIL DETAILS
CIVIL DETAILS

DATE FEBRUARY 2020
PROJECT NUMBER 14-068
DRAWING NUMBER CD-1
SHEET NUMBER 23

L:\CAD\PROJECTS\14-068 SPMUD FOOTHILLS TRUNK SEWER_(S)\DRAWINGS\DELIVERABLES\WORKING ALIGNMENTS\FINAL CONTRACT SET\1468D-G-D-CD.DWG

JOB NUMBER: 14-068 FILENAME: 1468D-G-D-CD.DWG PLOT DATE: 19-Feb-20 PLOT TIME: 15:23:45

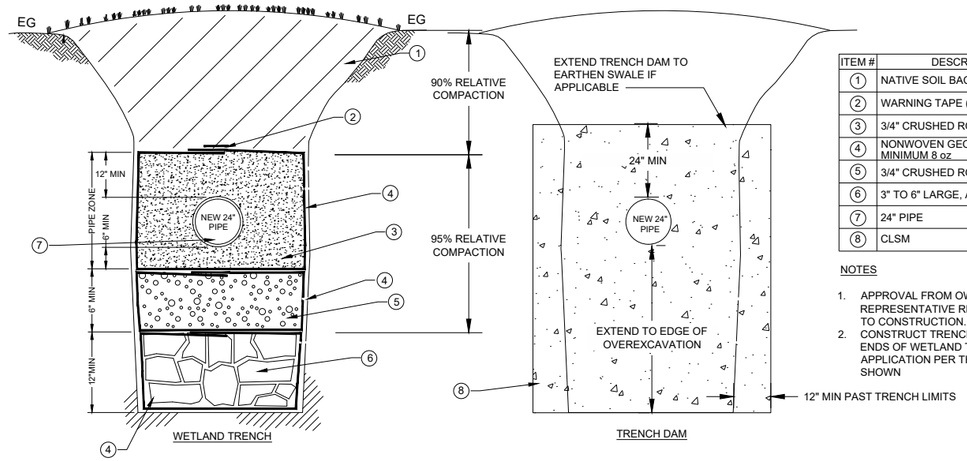

ITEM #	DESCRIPTION
1	NATIVE SOIL BACKFILL
2	WARNING TAPE (DETAIL 1/CD-1)
3	3/4" CRUSHED ROCK
4	NONWOVEN GEOTEXTILE CLOTH, MINIMUM 8 oz
5	3/4" CRUSHED ROCK
6	3" TO 6" LARGE, ANGULAR ROCK
7	24" PIPE
8	CLSM

NOTES

1. APPROVAL FROM OWNER OWNER'S REPRESENTATIVE REQUIRED PRIOR TO CONSTRUCTION.
2. CONSTRUCT TRENCH DAM AT BOTH ENDS OF WETLAND TRENCH APPLICATION PER THE DETAIL SHOWN

1 WETLAND TRENCH & CLSM DAM DETAIL

-- NTS

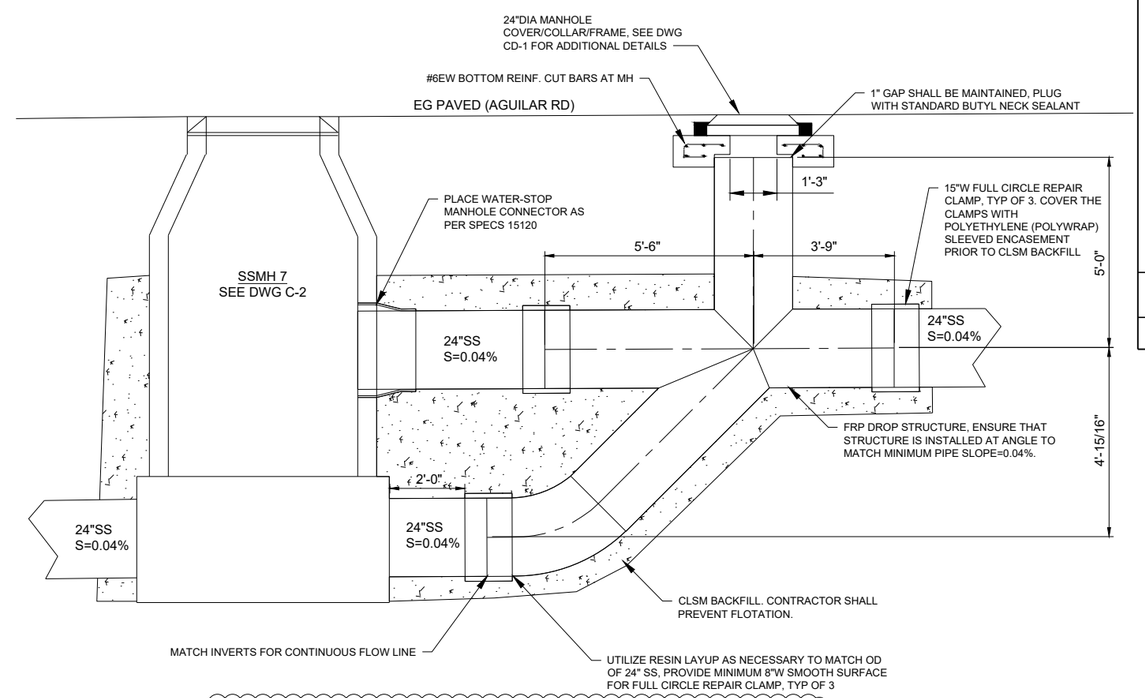

NOTE:
CONTRACTOR MAY SUBMIT FOR APROVAL CUSTOM PRECAST FRP-PVC MANHOLES ALTERNATIVES PER SPEC 03420

1

4 FRP DROP STRUCTURE

C-2 1"=2'

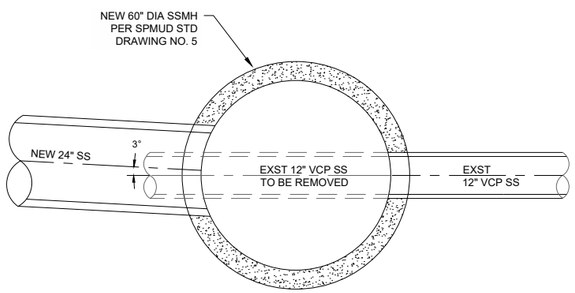

PLAN

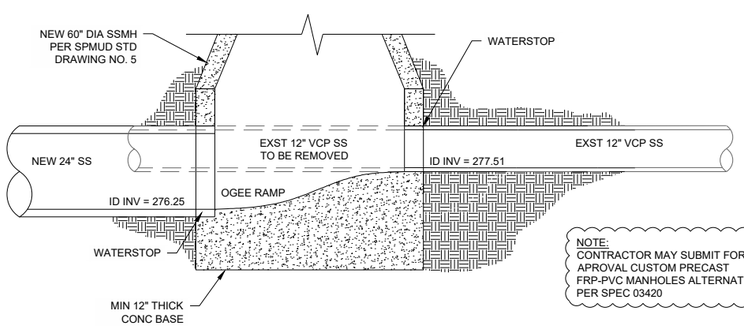

NOTE:
CONTRACTOR MAY SUBMIT FOR APROVAL CUSTOM PRECAST FRP-PVC MANHOLES ALTERNATIVES PER SPEC 03420

1

SECTION

1

2 SSMH 19 DETAIL

C-6 NTS

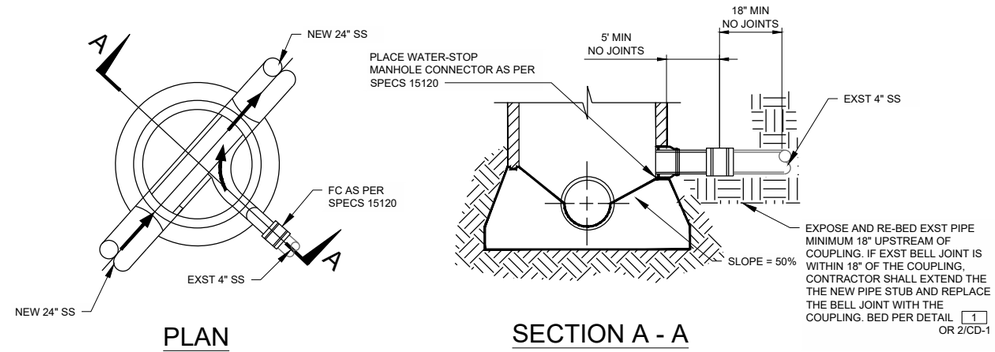

PLAN

SECTION A - A

NOTES

1. BUILD MANHOLE PER SPMUD STD DWG #5
2. PIPE MAY BE LAID THROUGH A LINE MANHOLE EXCEPT WHEN A GRADE OR LINE CHANGE OCCURS.

3 NEW SSMH PIPE CONNECTION DETAIL

C-2 NTS

REGISTERED PROFESSIONAL ENGINEER MICHAEL FISHER No. C067194 CIVIL STATE OF CALIFORNIA

10-8-2019

NO.	DATE	REVISION	BY	APV'D
1	02/13/20	ADDENDUM REVISIONS IN CONFORMED SET	DL	TL

DESIGN M FISHER
DRAWN T LEWIS
CHECKED M FISHER
APPROVED M FISHER

SOUTH PLACER MUNICIPAL UTILITY DISTRICT
FOOTHILLS TRUNK SEWER REPLACEMENT PROJECT

CIVIL DETAILS

CIVIL DETAILS CONT

DATE FEBRUARY 2020
PROJECT NUMBER 14-068
DRAWING NUMBER CD-2
SHEET NUMBER 24

WATERWORKS ENGINEERS
1322 Blue Oaks Blvd. Suite 300 • Roseville, CA 95678 • 916-790-2888

L:\CAD\PROJECTS\14-068 SPMUD FOOTHILLS TRUNK SEWER_(S)\DRAWINGS\DELIVERABLES\WORKING ALIGNMENTS\FINAL CONTRACT SET\1468D-G-D-CD.DWG

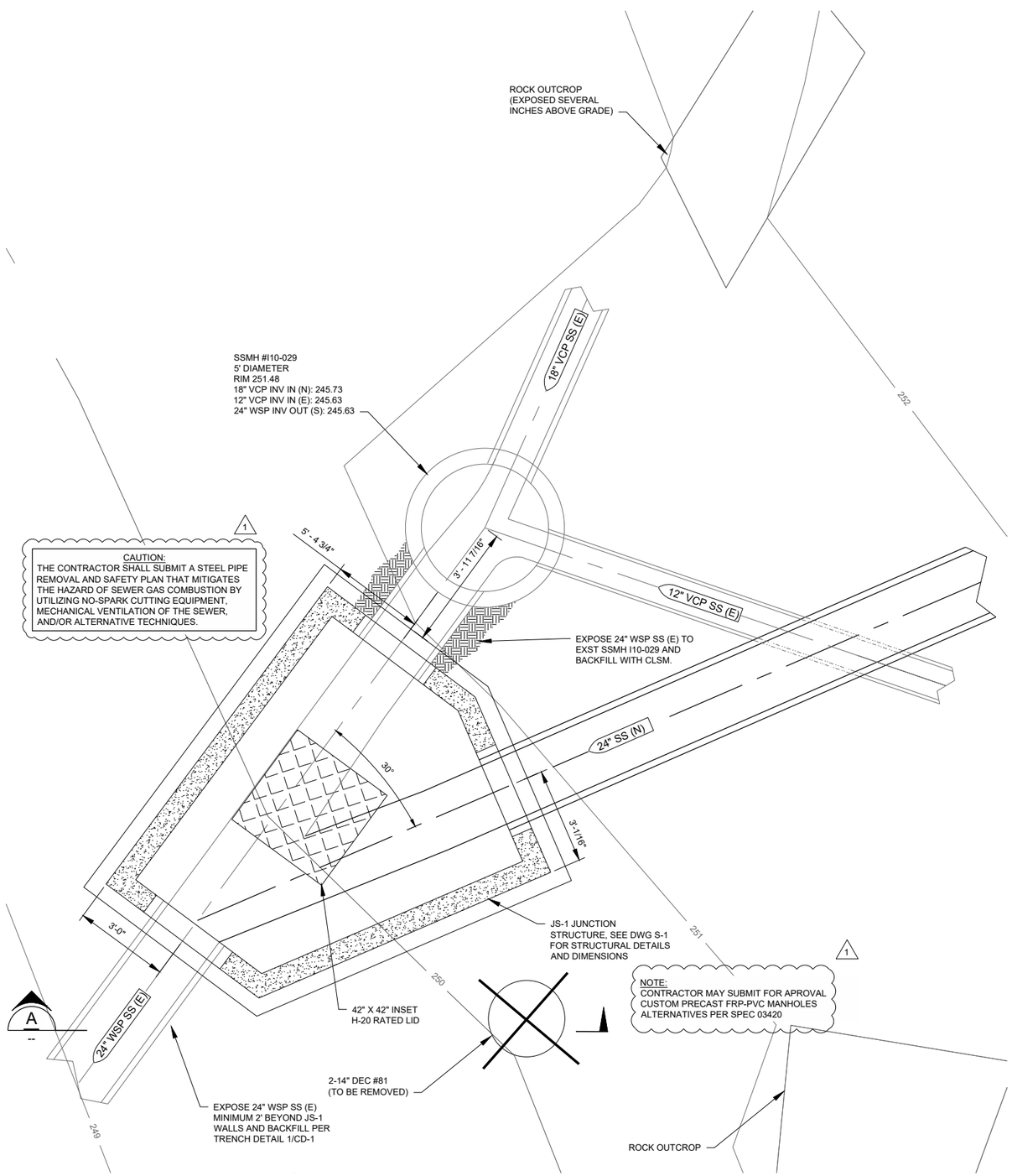

1 JS-1 PLAN DETAIL
-- 1"=2'

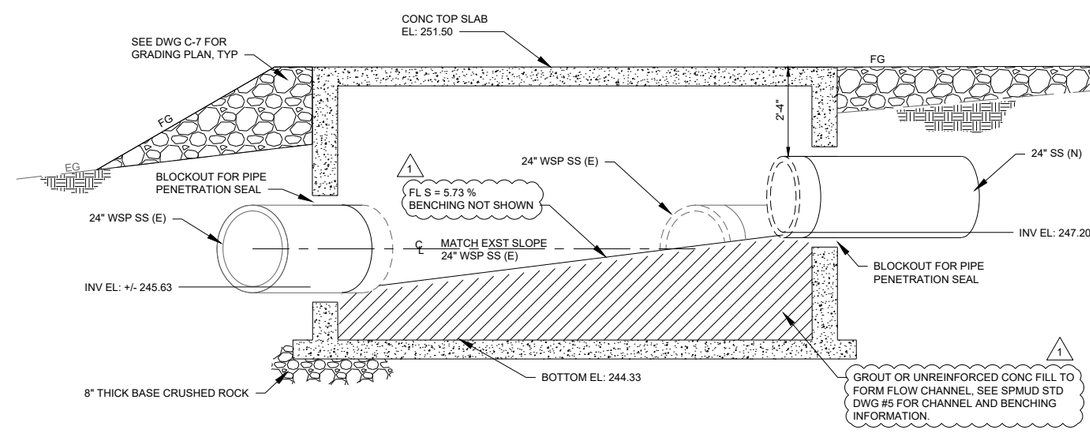

A SECTION
-- NTS

NO.	DATE	REVISION	BY	APVD
1	02/19/20	ADDENDUM REVISIONS IN CONFORMED SET	MIT	TL

DESIGN M FISHER
DRAWN T LEWIS
CHECKED M FISHER
APPROVED M FISHER

SOUTH PLACER MUNICIPAL UTILITY DISTRICT
SPMUD
SOUTH PLACER MUNICIPAL UTILITY DISTRICT

WATERWORKS ENGINEERS
1400 Eliot Avenue, Suite 300 • Sacramento, CA 95811 • 916-292-2393

SOUTH PLACER MUNICIPAL UTILITY DISTRICT
FOOTHILLS TRUNK SEWER REPLACEMENT PROJECT

CIVIL DETAILS
CIVIL DETAILS CONT

REGISTERED PROFESSIONAL ENGINEER
MICHAEL J. FISHER
No. C 67194
CIVIL
STATE OF CALIFORNIA
10-8-2019

DATE FEBRUARY 2020
PROJECT NUMBER 14-068
DRAWING NUMBER CD-3
SHEET NUMBER 25

PRELIMINARY - NOT FOR CONSTRUCTION

L:\CAD\PROJECTS\14-068 SPMUD FOOTHILLS TRUNK SEWER_(S)\DRAWINGS\DELIVERABLES\WORKING ALIGNMENTS\FINAL CONTRACT SET\1468D-C-JS-1-CD-3.DWG

JOB NUMBER: 14-068 FILENAME: 1468D-C-JS-1-CD-3.DWG PLOT DATE: 19-Feb-20 PLOT TIME: 15:30:01

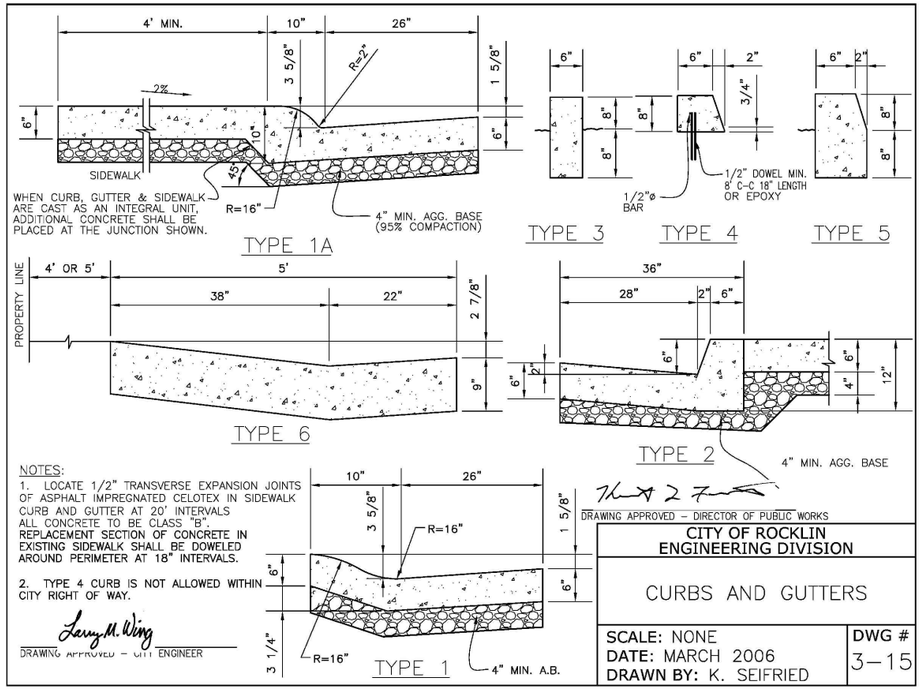

CITY OF ROCKLIN
ENGINEERING DIVISION

CURBS AND GUTTERS

SCALE: NONE
DATE: MARCH 2006
DRAWN BY: K. SEIFRIED

DWG # 3–15

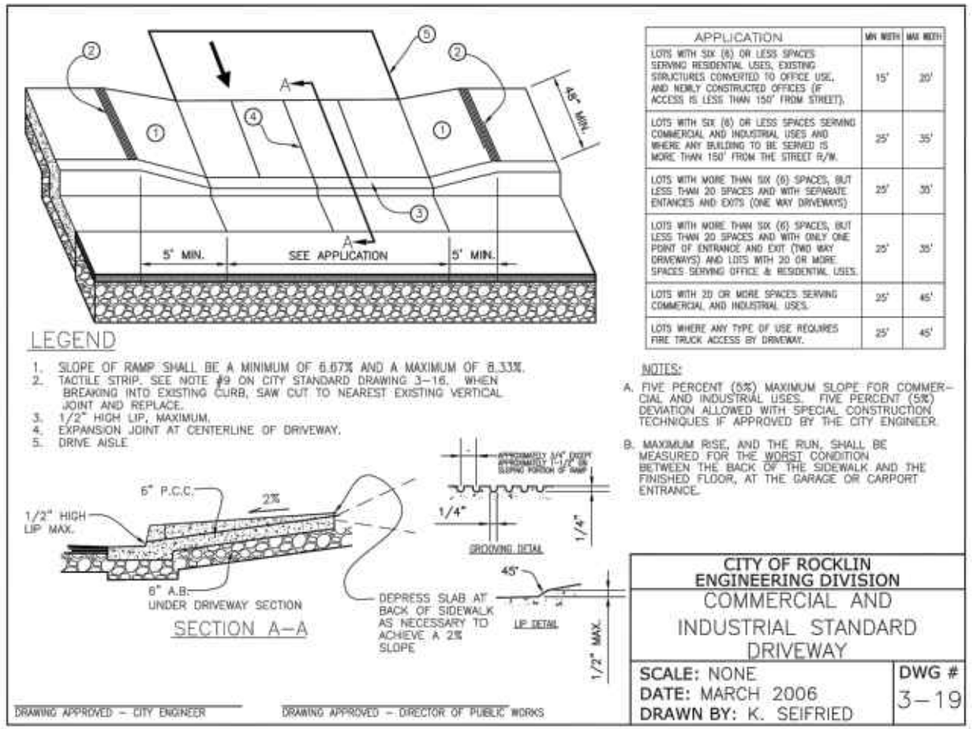

APPLICATION	MIN WIDTH	MAX WIDTH
LOTS WITH SIX (6) OR LESS SPACES SERVING RESIDENTIAL USES, EXISTING STRUCTURES CONVERTED TO OFFICE USE, AND NEWLY CONSTRUCTED OFFICES (IF ACCESS IS LESS THAN 150' FROM STREET).	15'	20'
LOTS WITH SIX (6) OR LESS SPACES SERVING COMMERCIAL AND INDUSTRIAL USES AND WHERE ANY BUILDING TO BE SERVED IS MORE THAN 150' FROM THE STREET R/W.	25'	35'
LOTS WITH MORE THAN SIX (6) SPACES, BUT LESS THAN 20 SPACES AND WITH SEPARATE ENTANCES AND EXITS (ONE WAY DRIVEWAYS)	25'	35'
LOTS WITH MORE THAN SIX (6) SPACES, BUT LESS THAN 20 SPACES AND WITH ONLY ONE POINT OF ENTRANCE AND EXIT (TWO WAY DRIVEWAYS) AND LOTS WITH 20 OR MORE SPACES SERVING OFFICE & RESIDENTIAL USES.	25'	35'
LOTS WITH 20 OR MORE SPACES SERVING COMMERCIAL AND INDUSTRIAL USES.	25'	45'
LOTS WHERE ANY TYPE OF USE REQUIRES FIRE TRUCK ACCESS BY DRIVEWAY.	25'	45'

NOTES:

A. FIVE PERCENT (5%) MAXIMUM SLOPE FOR COMMERCIAL AND INDUSTRIAL USES. FIVE PERCENT (5%) DEVIATION ALLOWED WITH SPECIAL CONSTRUCTION TECHNIQUES IF APPROVED BY THE CITY ENGINEER.

B. MAXIMUM RISE, AND THE RUN, SHALL BE MEASURED FOR THE WORST CONDITION BETWEEN THE BACK OF THE SIDEWALK AND THE FINISHED FLOOR, AT THE GARAGE OR CARPORT ENTRANCE.

CITY OF ROCKLIN
ENGINEERING DIVISION

COMMERCIAL AND INDUSTRIAL STANDARD DRIVEWAY

SCALE: NONE
DATE: MARCH 2006
DRAWN BY: K. SEIFRIED

DWG # 3–19

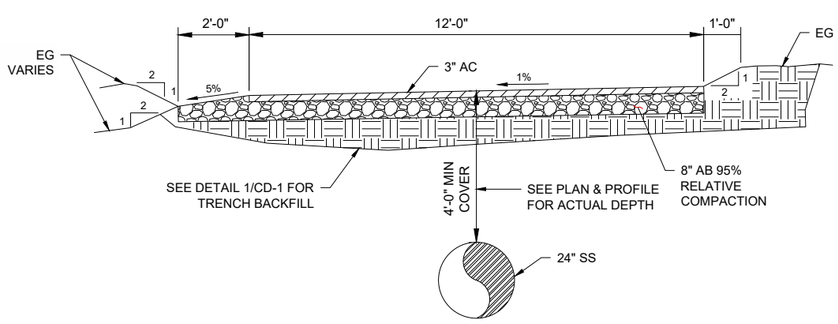

A C-8 12 FT PAVED ACCESS ROAD
1"= 2'-0"

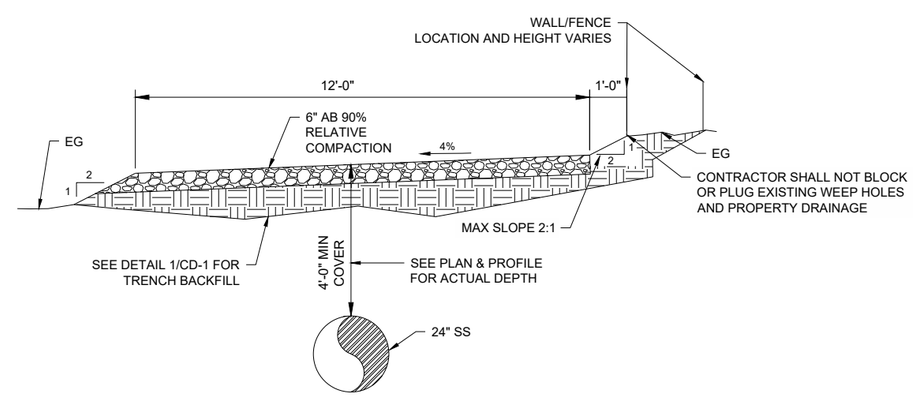

B C-9 & 10 12 FT WIDE TRENCH RESTORATION
1"= 2'-0"

REGISTERED PROFESSIONAL ENGINEER
MICHAEL P. FINN
No. C057194
CIVIL
STATE OF CALIFORNIA
10-8-2019

DESIGN M FISHER
DRAWN T LEWIS
CHECKED M FISHER
APPROVED M FISHER

WATERWORKS ENGINEERS
1322 Blue Oaks Blvd, Suite 300 • Roseville, CA 95678 • 916-790-2888

SOUTH PLACER MUNICIPAL UTILITY DISTRICT
FOOTHILLS TRUNK SEWER REPLACEMENT PROJECT

STANDARD DETAILS
CITY OF ROCKLIN STANDARD DETAILS

DATE FEBRUARY 2020
PROJECT NUMBER 14-068
DRAWING NUMBER CD-4
SHEET NUMBER 26

L:\CAD\PROJECTS\14-068 SPMUD FOOTHILLS TRUNK SEWER_(S)\DRAWINGS\DELIVERABLES\WORKING ALIGNMENTS\FINAL CONTRACT SET\1468D-G-D-CD.DWG

JOB NUMBER: 14-068 FILENAME: 1468D-G-D-CD.DWG PLOT DATE: 21-Feb-20 PLOT TIME: 12:31:25

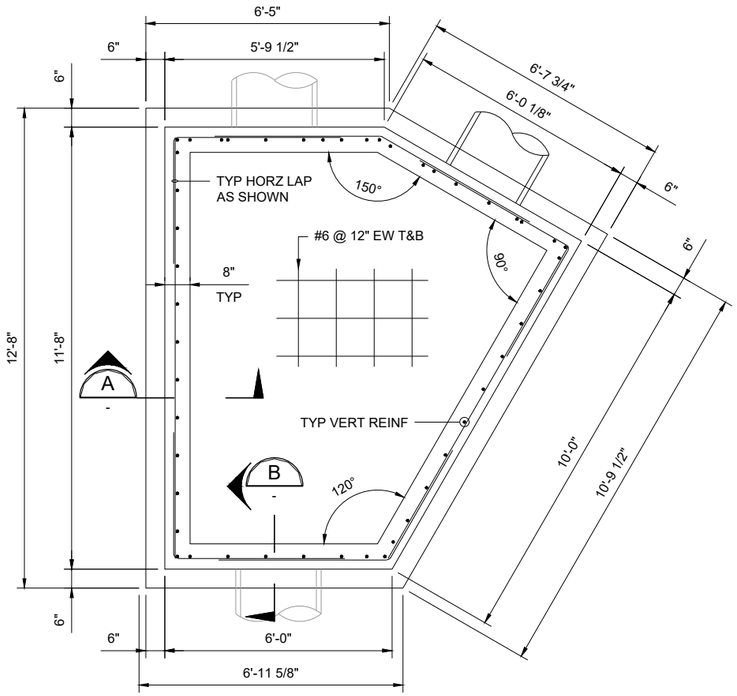

FOUNDATION PLAN

1/2" = 1'-0"

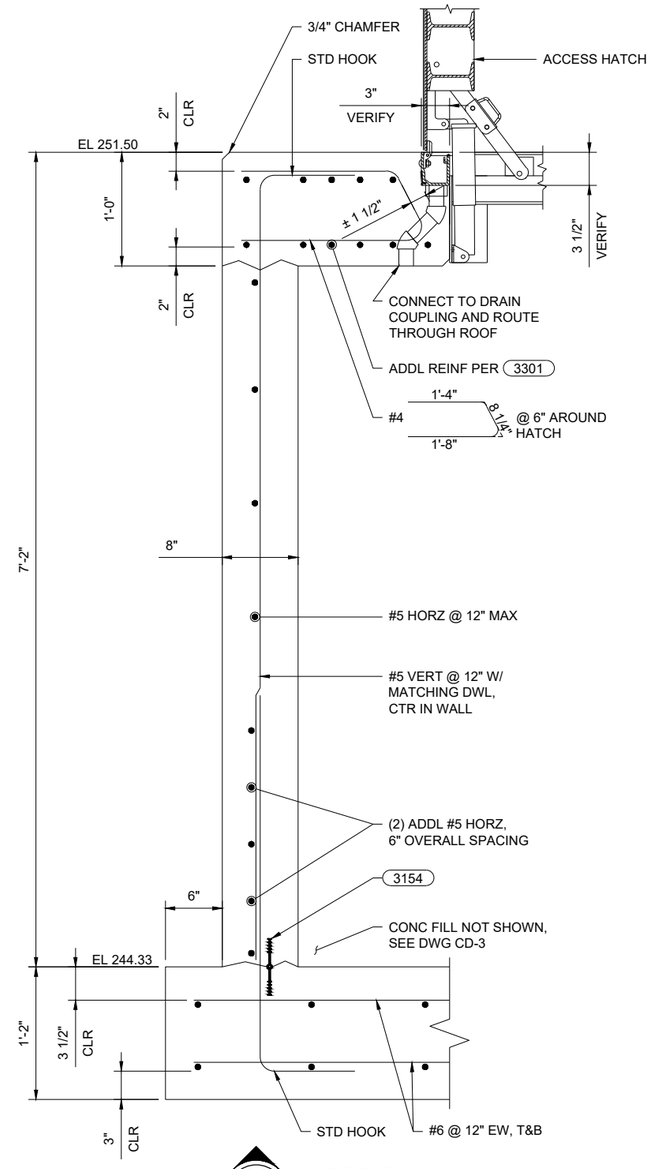

A SECTION

1 1/2" = 1'-0"

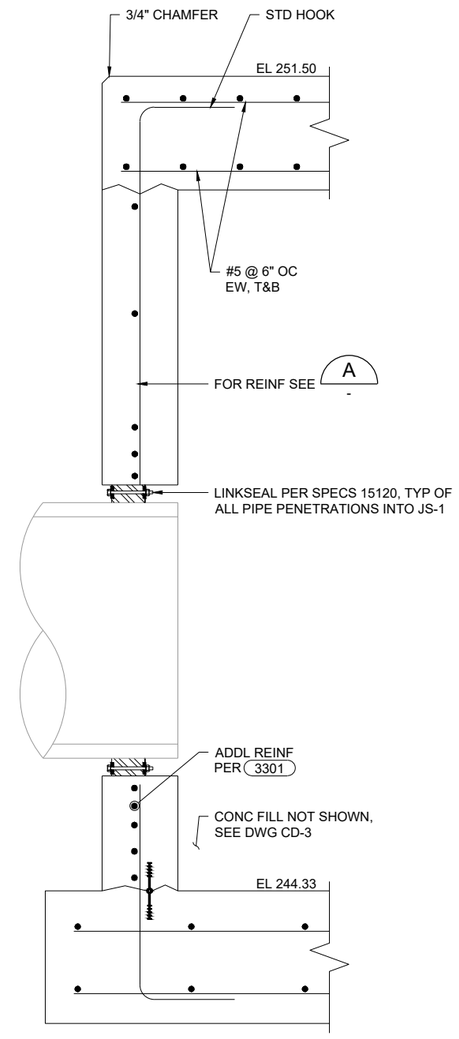

B SECTION

1 1/2" = 1'-0"

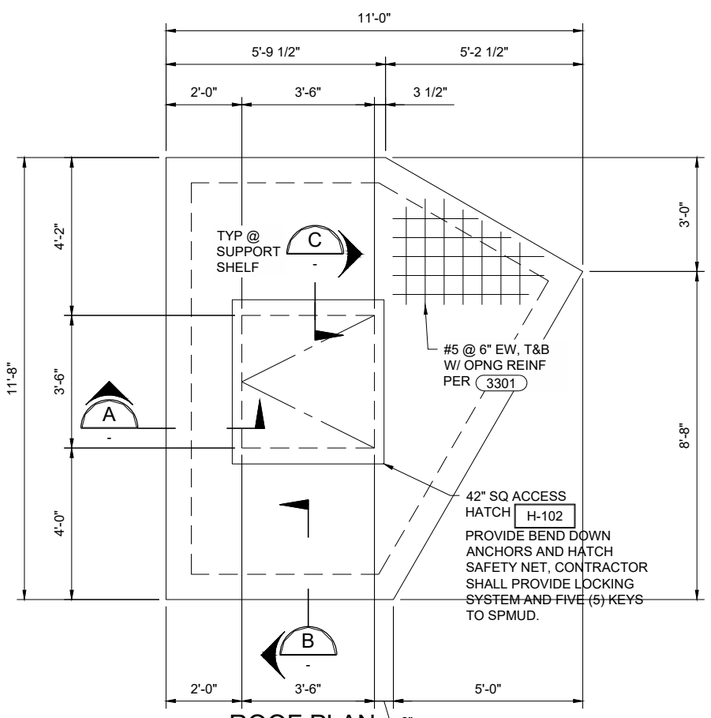

ROOF PLAN

1/2" = 1'-0"

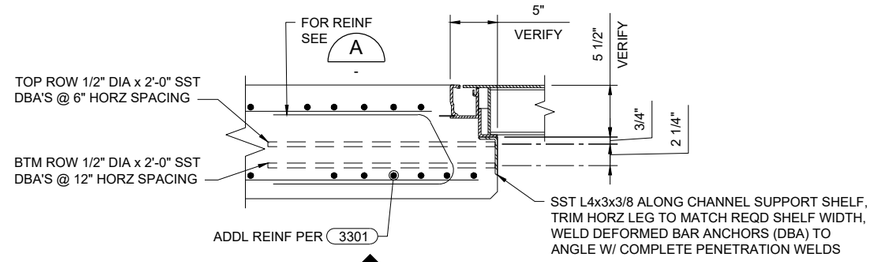

C SECTION

1 1/2" = 1'-0"

2 0 2 4 FEET
SCALE 1/2"=1'-0"

6" 0 6" 1 FEET
SCALE 1 1/2"=1'-0"

REGISTERED PROFESSIONAL ENGINEER
JEREMY A. KELLOGG
No. S5688
Exp. 12-31-18
STRUCTURAL
STATE OF CALIFORNIA
10/8/19

DESIGN J KELLOGG
DRAWN J KELLOGG
CHECKED J KELLOGG
APPROVED M FISHER

SOUTH PLACER MUNICIPAL UTILITY DISTRICT
SPMUD
SOUTH PLACER MUNICIPAL UTILITY DISTRICT

WATERWORKS ENGINEERS
1322 Blue Oaks Blvd, Suite 300 • Roseville, CA 95678 • 916-790-2888

FOOTHILLS TRUNK SEWER REPLACEMENT PROJECT

STRUCTURAL

JS-1 DETAILS

DATE FEBRUARY 2020
PROJECT NUMBER 14-068
DRAWING NUMBER S-1
SHEET NUMBER 27

W:\CAD\PROJECTS\14-068 SPMUD FOOTHILLS TRUNK SEWER_(S)\DRAWINGS\DELIVERABLES\WORKING ALIGNMENTS\FINAL CONTRACT SET\1468D-S-JS-1.DWG

JOB NUMBER: 14-068 FILENAME: 1468D-S-JS-1.DWG PLOT DATE: 21-Feb-20 PLOT TIME: 12:39:15

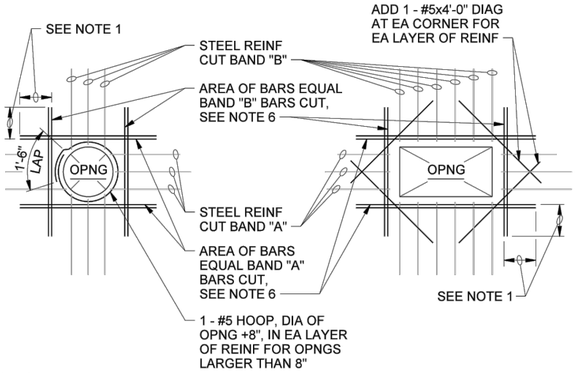

NOTES:

1. PROVIDE MINIMUM LAP, SEE GENERAL STRUCTURAL NOTES. WHERE FULL LAP LENGTH CANNOT BE ACHIEVED DUE TO SLAB OR WALL EDGE, TERMINATE BARS WITH A STANDARD 90 DEGREE BEND 2 INCHES CLEAR OF SLAB OR WALL EDGE. ROTATE HOOKS AS REQUIRED TO MAINTAIN CONCRETE COVER.
2. TYPICAL FOR ALL OPENINGS IN CONCRETE WALLS OF BELOW GRADE AND HYDRAULIC STRUCTURES AND ALL STRUCTURAL CONCRETE SLABS UNLESS INDICATED OTHERWISE ON PLANS.
3. DO NOT WELD REINFORCEMENT TO PIPE SLEEVES AND INSERTS.
4. PROVIDE A MINIMUM OF 2 "A" BARS AND 2 "B" BARS EACH SIDE OF OPENING (1 EACH FACE).
5. FOR OPENINGS LARGER THAN 8'-0", REINFORCE SAME AS FOR 8'-0" OPENINGS.
6. SPACE AT 3 BAR DIAMETERS (OR 3" MINIMUM) ON CENTER.

OPENING REINFORCING

NTS

3301

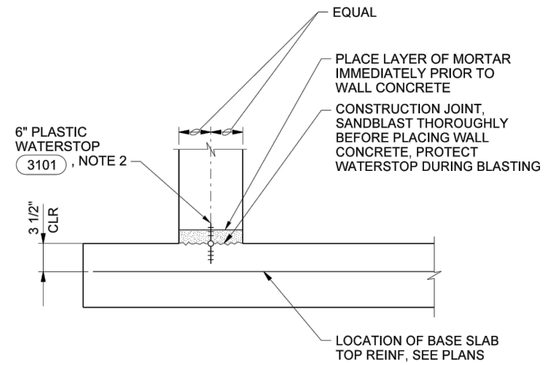

NOTES:

1. FOR WALLS WITH SINGLE MAT OF REINFORCING LOCATE WATERSTOP ON LIQUID FACE, 1" CLEAR OF REINFORCEMENT.
2. SECURE WATERSTOP IN-PLACE AS SPECIFIED.

WALL BASE CONSTRUCTION JOINT

NTS

3154

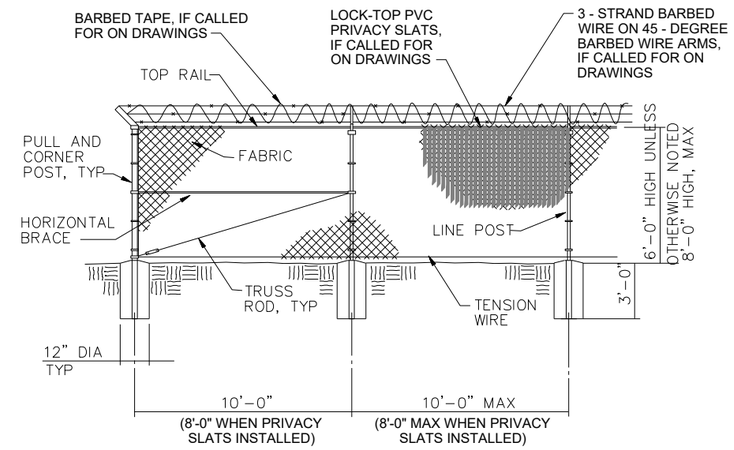

CHAINLINK FENCE

NTS

2800

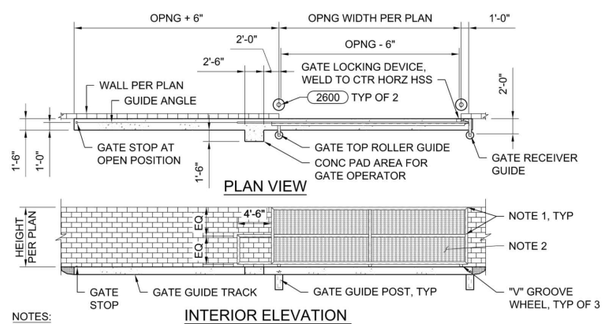

NOTES:

1. HSS2x4x1/4 FRAME, MITER CORNERS AND FULLY WELD ALL JOINTS. COORDINATE GATE WIDTH WITH HARDWARE TO PROPERLY FIT IN THE ROUGH OPENING. GRIND SMOOTH ALL SHARP CORNERS.
2. 1 1/2" DEEP 18 GAUGE PERFORATED / CORRUGATED METAL PANEL WITH 1/8" DIAMETER PERFORATIONS AT 1/4" CENTERS. WELD TO SUPPORTING FRAME AS SHOWN IN THE DETAILS.
3. PAINT ENTIRE GATE ASSEMBLY AFTER FABRICATION USING SYSTEM 300, COLOR SELECTED BY OWNER.
4. FOR ADDITIONAL CONNECTION DETAILS SEE 2819 (SEE DWG SD-2)

STEEL ROLLING GATE 1 OF 3

NTS

1

2815

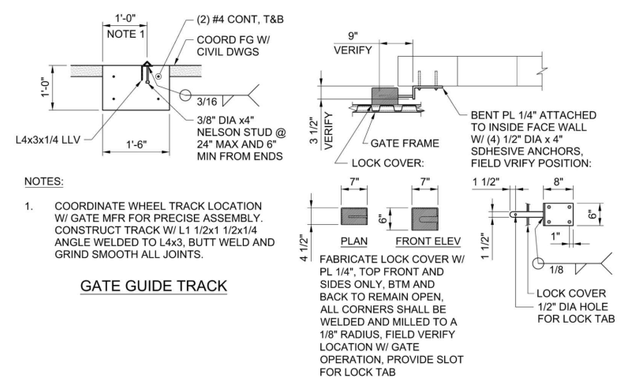

NOTES:

1. COORDINATE WHEEL TRACK LOCATION W/ GATE MFR FOR PRECISE ASSEMBLY. CONSTRUCT TRACK W/ L1 1/2x1 1/2x1/4 ANGLE WELDED TO L4x3, BUTT WELD AND GRIND SMOOTH ALL JOINTS.

GATE GUIDE TRACK

GATE LOCKING DEVICE

STEEL ROLLING GATE 2 OF 3

NTS

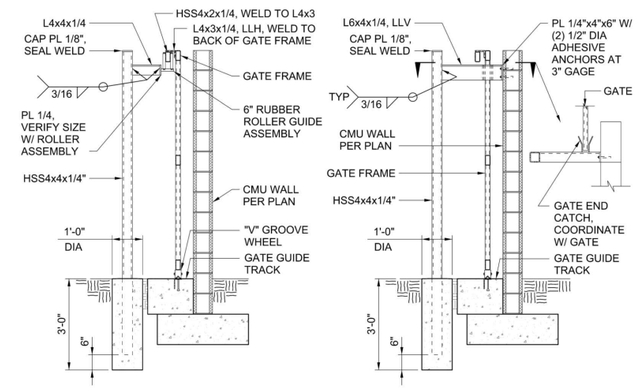

GATE TOP ROLLER GUIDE

GATE RECEIVER GUIDE

STEEL ROLLING GATE 3 OF 3

NTS

REGISTERED PROFESSIONAL ENGINEER MICHAEL P. FISHER No. C067194 CIVIL STATE OF CALIFORNIA

10-8-2019

NO.	DATE	REVISION	BY	APV'D
1	02/19/20	ADDENDUM REVISIONS IN CONFORMED SET	DL	TL

DESIGN M FISHER
DRAWN T LEWIS
CHECKED M FISHER
APPROVED M FISHER

SOUTH PLACER MUNICIPAL UTILITY DISTRICT
FOOTHILLS TRUNK SEWER REPLACEMENT PROJECT

STANDARD DETAILS

WWE STANDARD DETAILS

WATERWORKS ENGINEERS
1222 Blue Oaks Blvd, Suite 300 • Roseville, CA 95678 • 916-790-2888

DATE FEBRUARY 2020
PROJECT NUMBER 14-068
DRAWING NUMBER SD-1
SHEET NUMBER 28

L:\CAD\PROJECTS\14-068 SPMUD FOOTHILLS TRUNK SEWER_(S)\DRAWINGS\DELIVERABLES\WORKING ALIGNMENTS\FINAL CONTRACT SET\1468D-G-D-CD.DWG

JOB NUMBER: 14-068 FILENAME: 1468D-G-D-CD.DWG PLOT DATE: 19-Feb-20 PLOT TIME: 15:33:11

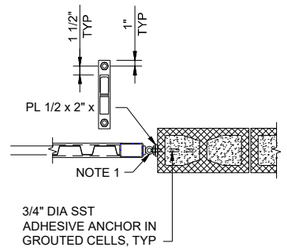

CMU WALL SUPPORT OPTION

NOTES:

1. PROVIDE WELD-ON BARREL GATE HINGE W/ 3/4" DIA SST HINGE PIN WHICH PIVOTS ON A BALL BEARING AND FEATURES A "ZERC" TYPE GREASE FITTING. WELDABLE PLATES SHALL BE A MINIMUM OF 3/8"x1 1/2"x3".

STEEL GATE DETAIL

NTS

1

2819

EROSION AND SEDIMENT CONTROL NOTES

1. ALL EROSION AND SEDIMENT CONTROL MEASURES SHALL BE CONSTRUCTED AND MAINTAINED IN ACCORDANCE WITH THE CALIFORNIA STORMWATER QUALITY ASSOCIATION IMPROVEMENT STANDARDS FOR EROSION AND SEDIMENT CONTROL AND PROJECT SWPPP. SEE ATTACHED B OF SWPPP FOR SUGGESTED EROSION AND SEDIMENT CONTROL MEASURES.
2. EROSION & SEDIMENT CONTROL BMPs MUST BE IN PLACE DURING ALL TIMES OF CONSTRUCTION. APPROPRIATE AMOUNTS (DEPENDING ON SIZE & CONDITION OF SITE) EROSION & SEDIMENT CONTROL DEVICES (FIBER ROLL, GRAVEL BAGS, ETC.) SHALL BE AVAILABLE ON SITE, DURING THE REST OF THE YEAR (DRY-SEASON) AND SHALL BE IMPLEMENTED PRIOR TO ANY SIGNIFICANT STORM EVENT THAT WILL GENERATE 1/10 INCH OF RAIN OR MORE.
3. ALL DRAINAGE INLETS IMMEDIATELY DOWNSTREAM OF THE WORK AREAS AND WITHIN THE WORK AREAS SHALL BE PROTECTED WITH SEDIMENT CONTROL AND INLET FILTER BAGS, YEAR ROUND. INLET FILTER BAGS SHALL BE REMOVED FROM THE DRAINAGE INLETS UPON ACCEPTANCE OF THE IMPROVEMENTS BY THE DISTRICT.
4. ALL STABILIZED CONSTRUCTION ACCESS LOCATIONS SHALL BE CONSTRUCTED CASQA TR-1, TR-2, TR-3, WHERE CONSTRUCTION TRAFFIC ENTERS OR LEAVES PAVED AREAS. THE STABILIZED ACCESS SHALL BE MAINTAINED ON A YEAR ROUND BASIS UNTIL THE COMPLETION OF CONSTRUCTION.
5. ALL AREAS DISTURBED DURING CONSTRUCTION, BY GRADING, TRENCHING, OR OTHER ACTIVITIES, SHALL BE PROTECTED FROM EROSION DURING CONSTRUCTION. HYDROSEED, IF UTILIZED, MUST BE PLACED BY SEPTEMBER 15. HYDROSEED PLACED DURING THE WET SEASON SHALL USE A SECONDARY EROSION PROTECTION METHOD.
6. SENSITIVE AREAS AND AREAS WHERE EXISTING VEGETATION IS BEING PRESERVED SHALL BE PROTECTED WITH CONSTRUCTION FENCING. SEDIMENT CONTROL BMPs SHALL BE INSTALLED WHERE ACTIVE CONSTRUCTION AREAS DRAIN INTO SENSITIVE OR PRESERVED VEGETATION AREAS.
7. TO ENCOURAGE NATIVE VEGETATION GROWTH (UPON APPROVAL BY OWNER) NATIVE GRASS SEEDS (SUITABLE FOR AREA) MAY BE APPLIED TO THE SLOPES.
8. SEDIMENT CONTROL BMPs SHALL BE PLACED ALONG THE PROJECT PERIMETER WHERE DRAINAGE LEAVES THE PROJECT. SEDIMENT CONTROL BMPs SHALL BE MAINTAINED YEAR ROUND UNTIL THE CONSTRUCTION IS COMPLETE OR THE DRAINAGE PATTERN HAS BEEN CHANGED AND NO LONGER LEAVES THE SITE.
9. THE FOLLOWING AREAS ARE TO RECEIVE HYDROSEED OR OTHER EROSION CONTROL:
   DISTURBED AREAS
   SLOPES-ALL SLOPES GREATER THAN 10:1
10. EROSION AND SEDIMENT CONTROL MEASURES FOR THIS PROJECT SHALL BE IN SUBSTANTIAL COMPLIANCE AT ALL TIMES WITH THE STORM WATER POLLUTION PREVENTION PLAN (SWPPP) PREPARED FOR THE PROJECT IN ACCORDANCE WITH THE STATE OF CALIFORNIA GENERAL CONSTRUCTION PERMIT. THIS PERMIT REQUIRES THAT THE SWPPP BE KEPT UP TO DATE TO REFLECT THE CHANGING SITE CONDITIONS AND THE SWPPP IS TO BE AVAILABLE ON SITE AT ALL TIMES FOR REVIEW BY STATE AND LOCAL INSPECTORS.
11. EFFECTIVE EROSION CONTROL BMPs SHALL BE IN PLACE EVERY AFTERNOON DAY AND PRIOR TO ANY RAIN EVENT.
12. BMP INSTALLATION SCHEDULE WILL CHANGE PER SITE CONDITIONS.
13. ALL BMPs GIVEN ARE SUGGESTED AND MAY BE SUBSTITUTED FOR AN APPROVED EQUAL.
14. ALL MATERIALS STORED ON SITE SHALL HAVE PROPER ENCLOSURES AND/OR COVERINGS.
15. CONTRACTOR SHALL PRESERVE EXISTING VEGETATION AS MUCH AS POSSIBLE.
16. APPLY HYDROSEEDING TO ALL INACTIVE DISTURBED AREAS THAT ARE DEEMED SUBSTANTIALLY COMPLETE REAPPLY WHEN NECESSARY AND AS DIRECTED BY QSP, DISTRICT OR ENGINEER.
17. MINIMIZE STREAMED CHANNEL DISTURBANCE PRESERVE EXISTING VEGETATION. RE-VEGETATE ALL DISTURBED STREAMED AREAS AT THE END OF PROJECT. USE DOUBLE ROWS OF LINER SEDIMENT BARRIERS TO KEEP SEDIMENT OUT OF THE CHANNEL AT ALL TIMES.
18. REMOVE ANY SEDIMENT OR OTHER CONSTRUCTION ACTIVITY RELATED MATERIALS DEPOSITED ON THE ROADS DAILY.
19. ALL DISCHARGE POINTS WHERE STORM WATER DISCHARGE OFF-SITE ARE CONSIDERED SAMPLING LOCATIONS.
20. FOR POST - CONSTRUCTION, ALL BMPs AND EROSION CONTROL SHALL BE IN PLACED PRIOR TO SEPTEMBER 15, AND APPROVED BY THE SWPPP. CONTRACTOR IS RESPONSIBLE FOR MAINTENANCE OF THE POST. CONSTRUCTION BMPS AND EROSION CONTROLS.

WDID#
DISTURBED AREA: ± AC

QSD CONTACT INFORMATION	
NAME	TELEPHONE NUMBER
MR. DAVE BURNS	530-222-4339
QSP CONTACT INFORMATION	
NAME	TELEPHONE NUMBER

REGISTERED PROFESSIONAL ENGINEER
MICHAEL J. FISHER
No. C 67194
CIVIL
STATE OF CALIFORNIA
10-8-2019

NO.	DATE	REVISION	BY	APV'D
1	02/19/20	ADDENDUM REVISIONS IN CONFORMED SET	DL	TL

DESIGN J SHAH
DRAWN T LEWIS
CHECKED J SHAH
APPROVED M FISHER

SOUTH PLACER MUNICIPAL UTILITY DISTRICT
SERVING FOOTHILLS

WATERWORKS ENGINEERS
1322 Blue Oaks Blvd, Suite 300 • Roseville, CA 95678 • 916-790-2888

SOUTH PLACER MUNICIPAL UTILITY DISTRICT
FOOTHILLS TRUNK SEWER REPLACEMENT PROJECT

STANDARD DETAILS
BMPS & EROSION CONTROL DETAILS

DATE FEBRUARY 2020
PROJECT NUMBER 14-068
DRAWING NUMBER SD-2
SHEET NUMBER 29

L:\CAD\PROJECTS\14-068 SPMUD FOOTHILLS TRUNK SEWER_(S)\DRAWINGS\DELIVERABLES\WORKING ALIGNMENTS\FINAL CONTRACT SET\BMP_SUPPORT_DWGS.DWG

JOB NUMBER: 14-068 FILENAME: BMP_SUPPORT_DWGS.DWG PLOT DATE: 19-Feb-20 PLOT TIME: 15:35:19