SOUTH PLACER MUNICIPAL UTILITY DISTRICT

STANDARD SPECIFICATIONS AND IMPROVEMENT STANDARDS FOR SANITARY SEWERS

5807 Springview Drive
Rocklin, CA 95677
Phone: 916-786-8555
Website: www.spmud.ca.gov

DRAFT **APRIL 2021**

SOUTH PLACER MUNICIPAL UTILITY DISTRICT

SECTION 1: GENERAL REQUIREMENTS & PROCEDURES 1

1.01 PURPOSE: 1
1.02 DESIGN PRACTICE: 1
1.03 DEFINITIONS: 1
1.04 APPROVED PLANS: 2
1.05 PLANS SIGNED BY ENGINEER: 2
1.06 PLAN SHEET FORMAT: 3
1.07 DRAFTING STANDARDS: 3
1.08 TITLE SHEET: 3
1.09 TITLE BLOCKS: 4
1.10 SEWER IMPROVEMENT PLAN REQUIREMENTS: 4
1.11 PLAN DETAILS: 8
1.12 REFERENCE TO DISTRICT SPECIFICATIONS & STANDARDS: 10
1.13 PROCEDURES & FEES: 10
1.14 IMPROVEMENT PLAN REVISIONS DURING CONSTRUCTION: 13
1.15 CONFLICTS, ERRORS & OMISSIONS: 13
1.16 SEWER ANNEXATION REQUIREMENTS: 14
1.17 EXISTING UTILITIES: 14
1.18 PARTIAL PLANS: 14
1.19 OTHER AGENCY NOTIFICATIONS: 14
1.20 SUMMARY OF PLAN SUBMITTAL & APPROVAL: 14

SECTION 2: MATERIALS 1

2.01 SEWER PIPE AND FITTINGS: 1
2.02 PIPE FITTINGS AND MISCELLANEOUS PIPE FACILITIES: 3
2.03 CONDUCTOR PIPE: 5
2.04 FORCE MAIN PIPE: 5
2.05 PRECAST REINFORCED CONCRETE MANHOLES: 5
2.06 SEALING COMPOUND: 6
2.07 JOINT WRAP: 6
2.08 CONCRETE: 6
2.09 MORTAR: 6
2.10 REINFORCING STEEL: 6
2.11 LINER COATING: 6
2.12 MANHOLE FRAMES AND COVERS: 7

SECTION 3: DESIGN 1

3.01 SANITARY SEWER SYSTEM DESIGN STANDARDS: 1
3.02 AVERAGE FLOW DETERMINATION: 1
3.03 DESIGN FLOW: 3
3.04 PIPE SLOPE, VELOCITY AND SIZE: 3

DRAFT

3.05 SEWER LOCATION AND ALIGNMENT REQUIREMENTS: 5
3.06 TRENCH LOADING CONDITIONS AND PIPE DESIGN: 8
3.07 MANHOLE CRITERIA: 9
3.08 DROP CONNECTION: 12
3.09 TEST MANHOLE: 12
3.10 FLUSHING BRANCH: 12
3.11 BUILDING SEWER LOWER LATERAL DESIGN: 13
3.12 CREEK CROSSING DESIGN: 16
3.13 BORING AND JACKING REQUIREMENTS: 17
3.14 CROSSING CULVERT PIPE: 17
3.15 ACCESS ROADS: 17
3.16 GREASE CONTROL DEVICES AND SAND OIL SEPARATORS: 19

SECTION 4: WASTEWATER PUMP STATION 1

4.01 DESIGN FACTORS TO BE CONSIDERED: 1
4.02 PLANS OF WASTEWATER PUMP STATIONS: 2
4.03 SITE IMPROVEMENTS: 3
4.04 STRUCTURE AND APPURTENANCES: 5
4.05 PUMPS, MOTORS AND CONTROLS: 13
4.06 PIPING AND VALVES: 30
4.07 EMERGENCY PROVISIONS: 34
4.08 MISCELLANEOUS: 36
4.09 OTHER REQUIREMENTS: 38
4.10 FORCE MAINS: 40
4.11 PERFORMANCE REQUIREMENTS: 43

SECTION 5: INSTALLATION 1

5.01 SANITARY SEWER SYSTEM CONSTRUCTION STANDARDS: 1
5.02 START OF CONSTRUCTION: 1
5.03 SAFETY: 1
5.04 INSPECTION: 2
5.05 SEWER SYSTEM PLUGS: 3
5.06 CONSTRUCTION STAKES: 3
5.07 EXISTING UTILITIES: 3
5.08 TRENCH EXCAVATION: 4
5.09 EXPLOSIVES AND BLASTING: 6
5.10 PIPE LAYING: 6
5.11 RELATIVE COMPACTION: 7
5.12 BEDDING AND INITIAL BACKFILL: 7
5.13 INTERMEDIATE BACKFILL (OUTSIDE OF CITY/COUNTY RIGHTS-OF-WAY): 9
5.14 INTERMEDIATE BACKFILL (IN CITY/COUNTY STREET RIGHTS-OF-WAY): 9
5.15 TOP BACKFILL (OUTSIDE OF CITY/COUNTY RIGHTS-OF-WAY): 9

DRAFT

5.16 TOP BACKFILL (IN OF CITY/COUNTY RIGHTS-OF-WAY): 9
5.17 IMPORTED SELECT BACKFILL: 10
5.18 OTHER BACKFILL REQUIREMENTS: 10
5.19 SURPLUS MATERIAL DISPOSAL: 10
5.20 EXISTING STREET CONSTRUCTION: 11
5.21 BORING AND JACKING: 11
5.22 MANHOLES: 12
5.23 CONNECTIONS TO STRUCTURES: 14
5.24 DROP CONNECTION: 14
5.25 FLUSHING BRANCHES: 15
5.26 CONNECTIONS TO EXISTING FACILITIES: 15
5.27 BUILDING SEWER LOWER LATERALS: 15
5.28 FORCE MAIN AND PUMP STATION: 17
5.29 ADJUSTING TO GRADE: 17
5.30 ABANDON EXISTING FACILITIES: 17
5.31 ACCESS ROADS: 18
5.32 GREASE CONTROL DEVICES AND SAND OIL SEPARATORS: 19
5.33 CLEAN-UP: 19
5.34 ACCEPTANCE TESTS: 19
5.35 FINAL WALK-THROUGH INSPECTION: 28
5.36 FIELD ACCEPTANCE OF PROJECT: 28
5.37 DISTRICT ACCEPTANCE OF PROJECT: 28
5.38 GUARANTEE: 29
5.39 REPAIRING INSTALLED IMPROVEMENTS: 29

SECTION 6: EASEMENTS & RIGHTS OF WAY 1

6.01 INTENT: 1
6.02 REQUIREMENTS: 1
6.03 STREET LOCATION: 2
6.04 SEWER EASEMENTS: 2
6.05 SEWER IN PUBLIC UTILITY EASEMENTS: 3

SECTION 7: BUILDING SEWERS 1

7.01 BUILDING SEWER STANDARDS: 1
7.02 PERMIT REQUIRED: 1
7.03 COSTS BORNE BY OWNER/APPLICANT: 1
7.04 USE OF EXISTING BUILDING SEWERS: 1
7.05 SEPARATE BUILDING SEWER REQUIRED: 1
7.06 MATERIAL: 2
7.07 SIZE AND SLOPE: 2
7.08 INSTALLATION: 3
7.09 INSPECTIONS: 7

DRAFT

7.10 TESTING: 8
7.11 WATER, DIRT AND DEBRIS ENTERING THE SYSTEM: 8
7.12 ABANDONMENT: 9
7.13 BUILDING SEWER REPAIRS: 9
7.14 DAMAGE TO EXISTING FACILITIES: 10
7.15 BUILDING SEWER DETAIL DRAWINGS: 10

SECTION 8: STANDARD DETAIL DRAWINGS 1

8.01 STANDARD DETAIL DRAWINGS 1
1. ESTIMATED AVERAGE FLOW
2. PEAKING FACTORS
3. MAXIMUM TRENCH WIDTH FOR VITRIFIED CLAY PIPE
4. PIPE BEDDING AND INITIAL BACKFILL
5. MANHOLES
6. SHALLOW PIPE MANHOLES
7. INSIDE DROP CONNECTION
8. OUTSIDE DROP CONNECTION
9. 6" AND 8" FLUSHING BRANCH
10. BUILDING SEWER LOWER LATERAL ELEVATION
11. BUILDING SEWER LOWER LATERAL PLAN
12. PROPERTY LINE CLEANOUT TO GRADE
13. ACCESS ROAD EASEMENT RIGHT TURN
14. ACCESS ROAD EASEMENT HAMMERHEAD TURN AROUND
15. ACCESS ROAD EASEMENT INTERMEDIATE TURN AROUND
16. ACCESS ROAD PIPE GATE
17. UTILITY CROSSING
18. CONCRETE EROSION PROTECTION
19. WASTE WATER PUMP STATION BYPASS MANIFOLD
20. SIGNATURE BLOCK AND STANDARD NOTES
21. RAISED MANHOLES
22. REMOVABLE BOLLARD

DRAFT

SECTION 1: GENERAL REQUIREMENTS & PROCEDURES

1.01 Purpose:

The purpose of these Standard Specifications and Details (Standards) is to provide minimum acceptable requirements to be applied to both public and private sewer and sewerage development works:

- to be dedicated to the public for operation and maintenance; or
- requiring the approval of South Placer Municipal Utility District; or
- to be installed within existing or new public rights-of-way or easements.

These Standards are necessary to provide for the safety and general welfare of the public that will be using the subject facilities. These Standards shall regulate and guide the planning, design, and construction of all sanitary sewer systems within the District.

1.02 Design Practice:

It is recognized that it is not possible to anticipate all situations that may arise in the planning, design, and construction of sewer facilities or to prescribe standards applicable to every situation. Therefore, any items or situations not included in these Improvement Standards shall be designed and constructed in accordance with accepted engineering practice, and as required by the District.

1.03 Definitions:

Whenever the following terms or titles are used in these Improvement Standards, or in any contract, agreement, document, or instrument where these Standards govern, the intent and meaning shall be as herein defined:

A. "Accessory Dwelling Unit" Accessory Dwelling Unit (ADU) shall have the meaning set forth in California Government Code Section 65852.2.

B. "Building Drain" The pipeline within the building footprint which connects to the Building Sewer.

C. "Building Sewer" The pipeline connecting a building drain to a public sewer, consisting of an upper lateral and a lower lateral.

D. "Consulting Engineer" That person or persons, firm, partnership, or corporation legally authorized to practice civil engineering in the State of California who, acting as agent for a client or developer, prepares or submits improvement plans and specifications to the District for approval.

E. "Contractor" Any person or persons, firm, partnership, corporation or combination thereof who has entered into a contract with any person, corporation, company, special district, city or the county as a party or parties of the second part, or his or

DRAFT

their legal representative, for the construction of any approved sewer facilities with the District. All Contractors shall be licensed in accordance with the laws of the State of California.

F. "Developer" Any person, or persons, firm, partnership, corporation, or combination thereof, who is financially responsible for the construction of approved sewer facilities within the District.

G. "District" The South Placer Municipal Utility District, a public sewer agency.

H. "District Engineer" The Engineer of South Placer Municipal Utility District acting as agent of the District either directly or through authorized deputies or subordinates.

I. "General Manager or Manager" The General Manager of South Placer Municipal Utility District acting either directly or through authorized deputies, inspectors, engineers, or agents.

J. "Lower Lateral" That part of the building sewer running from the limits of the public right-of-way to the public sewer.

K. "Owner" The record owner of real property, residence, or business served by a sewer connection to District facilities.

L. "State Standard Specifications or State Specifications" The Standard Specifications of the State of California, Business and Transportation Agency, Department of Transportation, latest edition.

M. "Upper Lateral" That part of the building sewer running from two (2) feet outside the face of the building wall to the public right-of-way.

1.04 Approved Plans:

A. No construction of public or private sewer facilities shall be undertaken within the District or to serve properties within the District until plans and specifications for such facilities have been approved by the District.

B. The approval shall be substantiated by the signature of the District Engineer on the plans obtained prior to initiation of construction.

C. The District may order any Contractor to cease work on any project if said Contractor does not have properly approved plans in his possession at the job site.

1.05 Plans Signed by Engineer:

A. All plans and specifications for sewer facilities, private or public, which are prepared for approval by the District shall be prepared, stamped, and signed by a Civil Engineer currently licensed to practice within the State of California.

DRAFT

1.06 Plan Sheet Format:

A. All improvement plans shall be prepared on 22" or 24" x 36" plan and profile sheets or on special consulting engineer's sheets, which have been accepted in writing by the District. Plan scales shall be as follows:

(i)	Horizontal:	1” =	20’	40’ or	50’
(ii)	Vertical:	1” =	2’	4’ or	5’

(b) Only the horizontal or vertical scale for which the sheet was intended and has been set up shall be used.

1.07 Drafting Standards:

A. All plans submitted for approval to the District shall conform to that quality of drafting standard that will result in clear and legible prints and microfilm.

B. All lines shall be clear, sharp, and heavy.

C. Letters and numerals shall be 1/8-inch minimum height, well formed, and sharp.

D. Numerals showing profile elevations shall not be bisected by station grid lines.

E. Dimension lines shall be terminated by sharp solid arrowheads.

1.08 Title Sheet:

A. On all improvement plans exceeding 3 sheets in a set, a title sheet shall be included that shows the following:

1. The project or subdivision name, and the name and address of the developer/owner.
2. A plan of the overall subdivision, parcel, or project.
3. Boundaries of the District, cities, county, and assessment district (if any).
4. Street names and widths.
5. Section lines, grant lines, property lines, and corners.
6. Names of adjacent subdivisions, lot lines, and lot numbers.
7. Public easements.
8. Vicinity and location maps.
9. Scale of drawings and details.

DRAFT

10. North arrow where appropriate. The North arrow will be oriented to the top or right of the plan sheet

11. Index of sheets.

12. Legend of symbols and lines.

13. Standard and special notes.

14. Signature block for approval of the District Engineer (Signature block format shall be in accordance with Standard Drawing No. 20.)

15. Improvement plans consisting of 3 or less sheets will not be required to provide a title sheet as such, but all information otherwise required to be included on the title sheet shall be provided on the other sheets of the plans.

1.09 Title Blocks:

A. Every sheet of a set of plans submitted to the District for approval shall have a title block showing project or subdivision name, sheet title, sheet number, date, scale, Consulting Engineer's address and phone number, and other pertinent information.

B. The preferred location for the title block is along the right-hand end of the sheet so that the title block information is visible when the plans are rolled up.

1.10 Sewer Improvement Plan Requirements:

A. Plans for the construction of sanitary sewers, whether in conjunction with other improvements or for a sewer project only, shall conform to the following standards, as well as other standards contained in these Standard Specifications and Improvement Standards:

1. Study Map - A study map may be required prior to review of the sewer design if there is a possibility that upstream or adjacent areas may require service through the subject property. The map shall show the entire service area including upstream tributary and adjacent areas, and all other data necessary to determine anticipated sewage flows. The method of providing sewer service to the entire service area, including pipe sizes and slopes, shall be shown to the extent necessary to determine the requirements within the subject property.

2. General Requirements - Plans for sewer improvement projects shall include a layout sheet, plan and profile of each sewer line, and any necessary detail drawings. The plans shall be clearly legible and conform to accepted practice with respect to drafting standards. All information, which, in the opinion of the District is necessary for the satisfactory design, review, construction, and maintenance of a project shall be provided and, where applicable, shall be shown on the plans.

DRAFT

3. Layout Sheet - All sewer improvement plans shall include a sheet which shows the project boundaries, sewer lines, manholes, flushing branches, and other important items of the work.

4. Plan and Profile Sheets

   a) Sewers that will be owned and maintained by the District shall be shown in both plan and profile views on approved plan and profile sheets.

   b) The following standards, with respect to drafting and the information to be included on the plan and profile sheets, generally apply to projects in developed areas.

   c) In new subdivisions, only the requirements that are applicable shall apply.

      1) Sewer lines and manholes:

         (a) Sewer lines to be constructed shall be indicated on the profile by parallel lines spaced the pipe diameter or by a single heavy line at the pipe invert for 10-inch diameter and smaller lines only.

         (b) Manholes shall also be indicated by parallel lines spaced according to scale or by a single heavy vertical line, if the sewer profile is also shown on a single line.

         (c) Slope shall be printed 1/8-inch above, and preferably parallel to, the line, or between the parallel lines.

         (d) The length, size, and type of pipe between each manhole shall be printed parallel to the horizontal grid lines and approximately halfway between the ground surface and pipeline.

         (e) All pipe inverts at manholes and other structures shall be indicated on the profile.

         (f) The invert elevations shall be printed parallel to the horizontal grid lines and shall be underscored by a line which then runs at a 45-degree angle to the corresponding pipe invert.

         (g) When manholes, manholes with drop connections, flushing branches, or other appurtenances are to be constructed, the profile shall be so noted.

         (h) Manhole identification on the plan view may be oblique.

         (i) Manhole stationing shall appear at the lower edge of the profile grid directly under the manhole.

      2) Existing facilities shown on the profile shall be cross-hatched.

DRAFT

3) In improved areas:

   (a) Addresses of buildings shall be shown on the plan view, within the outline of the building. Only the front line and indication of side lines of buildings need be shown.

   (b) The location of each building sewer lower lateral proposed to be constructed shall be indicated on the plans by stationing or by reference to a permanent, well-defined structure, if available.

   (c) In new subdivisions, the lower lateral shall be located by stationing, by dimension to lot line, or by notation to install at the center of the lot.

   (d) The invert elevation of the lower lateral at the property line shall be indicated on all plans.

   (e) Improvements or lots shown on a plan sheet but served to a line shown on another plan sheet shall have the direction of service shown by a small triangle and letter "S".

4) Easements:

   (a) Both permanent and temporary construction easements shall be shown to scale on the plans.

   (b) Easement dimensions shall be shown, and each easement shall be tied to both the property line and the sewer line.

   (c) Each permanent easement shown on the plans shall be identified by the book and page number or document number in which the easement is recorded.

   (d) The Consulting Engineer shall provide the book and page number or document number of all recorded easements or permanent rights-of-way

5) Trench/Bedding:

   (a) Indicate the limiting maximum trench width, as measured at the top of the pipe, on the plans between well-defined points of application; the pipe material and class, if more than one class is available; and the bedding-backfill type. Type I bedding, when used, and unlimited trench width, when allowed, need not be shown on the plans.

   (b) If more than one combination of pipe class, maximum limiting trench width, or bedding type is available, a practical range of such combinations shall be shown on the plans.

6) Proposed sewer dimensioning:

DRAFT

(a) Proposed sewer line shall be adequately dimensioned from street centerline.

(b) If the sewer line is to be located in an easement, sufficient dimensions and bearings from physical features to locate the line in the field shall be shown on the plans.

7) Other Utilities:

(a) Gas mains, water mains, storm drains, and all other main utility lines above or below ground shall be determined and shown on the plans with accuracy as great as practicable.

(b) Water service lines shall be shown.

8) Trees:

(a) Trees, including the drip line at maturity, shall have their correct location and dimensions shown on the plans. The clearance between the tree drip line and the sewer easement shall be shown.

(b) The diameter of tree trunks and interfering heavy tree branches shall be noted.

(c) Removal of a tree or object, or other special handling shall be noted on the plans.

(d) The Consulting Engineer shall assume full responsibility for such notes as it is assumed that they have made all necessary arrangements with the owner of the object to be handled.

(e) Written documentation of any special arrangements regarding preservation of property made between property owners and the Consulting Engineer shall be supplied to the District if no easement document is involved.

(f) If an easement is negotiated, all special arrangements shall be included in the easement or easement agreement document.

(g) Tree removal within sewer easements shall be approved by the District.

9) Culverts:

(a) Culverts shall be shown on both plan and profile when crossed by the construction or when parallel and within 20-feet of the sewer alignment centerline.

(b) The size and type of all such culverts shall be indicated and when the culvert crosses or is perpendicular or nearly so and within 20-feet of the

DRAFT

sewer alignment centerline, the invert of the culvert end nearest the construction line shall be shown.

1.11 Plan Details:

A. In addition to the other requirements of these Improvement Standards, the following details shall be shown on plans submitted for approval. This does not in any way exempt the Consulting Engineer from the responsibility of preparing neat, accurate and comprehensive plans in keeping with the standards of the profession.

1. Rights-of-Way

   a) Rights-of-way lines, the boundaries of lots fronting on the street, drainage easements, utility easements, landscape easements, section lines and corners, land grant lines and temporary construction easements, both existing and proposed, shall be shown on the plans.

   b) All rights-of-way and easement lines shall be properly dimensioned.

2. Topography

   a) All pertinent topographic features shall be shown, such as street line, medians, driveways (on both sides of the street when within 40-feet of the median ending), curbs, sidewalks, shoulders, location and size of storm and sanitary sewer lines, high water and frequent inundation levels, water lines, gas lines, telephone conduits, other underground utilities, existing structures, houses, trees (6inches and larger) and other foliage, traffic signals, street lights and pullboxes, underground electrical conduits, drainage ditches, utility poles, fire hydrants, retaining walls, masonry structures, and all other features of the area which may affect the design requirements for the area.

   b) When a potential utility conflict exists, "as built" elevations of the utilities shall be verified by the Consulting Engineer by means such as surveying or potholing operations. Potholing of all exiting utilities shall be coordinated with the appropriate utility owner.

3. Contours and Elevations

   a) Existing contours or elevations shall be shown on all plans submitted for subdivisions, commercial improvements, or planned unit developments.

4. Profiles

   a) The plans shall show the profile of all roadway centerlines, edges of pavement, curb and gutter flow lines, drainage ditches, water lines, storm and sanitary sewers.

   b) All profiles of proposed sewer improvements shall show pipe slopes and other vertical alignment data and invert elevations at manhole entrances and exits.

DRAFT

c) The plans shall show the existing ground profile along all alignments and for a minimum distance of 200-feet beyond temporary street endings to facilitate setting proper vertical alignment within the proposed improvement limits.

d) The 200-foot minimum shall be increased when requested by the District.

5. Stationing and Orientation

a) The stationing on plan and profile sheets shall read from left to right.

b) Stationing shall increase from south to north or from west to east.

c) Plans shall be so arranged that the North arrow points toward the top or right of the sheet, insofar as practical.

6. Benchmarks

a) The benchmarks and datum shall be clearly delineated on the plans as to location, description and elevations.

b) The datum shall be 1929 North American Datum (U.S.G.S. or U.S.C. & G.S.)

7. Horizontal Control

a) Horizontal control shall be tied to the District's coordinate system, herein referred to as the SPMUD Coordinate System, which is based on the California State Plane Coordinate System, Zone 2, NAD 1983.

8. Typical Sections

a) A typical section for each type of facility within the improvement, setting out the structural features, shall be a part of the plans.

9. Cross Sections

a) Cross sections shall be included in the plans, where determined necessary by the District.

b) When, in limited areas, unusual topographic features or special conditions occur that would affect the work, individual cross sections may be shown on the pertinent plan sheets.

10. Special Notes

a) Special notes shall be clearly indicated, and it shall be conspicuously noted on the plans that all construction work and installations shall conform to the District's Standard Specification and Improvement Standards and that all work is subject to the approval of the District. Notes shall contain a statement

DRAFT

regarding obtaining encroachment permits from other agencies when applicable.

11. Detail Drawings

a) Items of a special nature shall be shown with detail drawings, either on the plan sheets, or on a separate detail sheet.

1.12 Reference to District Specifications & Standards:

A. The General Notes and Special Provisions of all plans shall include the following note:

(1) "All sanitary sewer construction and materials shall be in accordance with the South Placer Municipal Utility District "Standard Specifications and Improvement Standards for Sanitary Sewers", latest edition."

1.13 Procedures & Fees:

A. Except for projects undertaken directly by the District, the planning and design of sewer facilities within the District will be performed by the Developer's Consulting Engineer.

B. The following is a sequential, step by step outline of the procedures to be followed and fees to be paid to the District:

1. During the planning phase, the South Placer Municipal Utility District should be consulted regarding District policies, design criteria, special field conditions, annexation, special agreements, proposed routes and rights-of-way, permits, and any other matter on which a decision by the District may have ultimate effect on final design.

2. When completed, 2 full sets of plans and specifications properly signed by a licensed Civil Engineer) shall be presented to the District for checking.

a) A soils report shall be submitted to the District for any offsite sewer alignment not included within the project soils report or as otherwise requested by the District.

3. Plan Check:

a) Plan checking by the District will not be started until the designated deposit has been made against the District's final estimated processing fees.

1) The final estimated fees will be the District's direct and incidental administrative and inspection/field costs related to the project including Warranty Inspection, but not less than the deposit. Improvement plans will not be approved by the District until the final estimated fees are paid.

DRAFT

b) Improvement plans shall be submitted electronically in a PDF file format.

c) Improvement plans submitted for checking shall show all existing and proposed rights-of-way and easements.

1) Easements shall be dedicated to or granted to the District along all main sewer lines not constructed within existing or proposed public street rights of way.

2) It is the responsibility of the Developer/Owner to ascertain the need, location, and acquisition of all easements.

3) Under no circumstances will the District accept the Bill of Sale and maintenance and operation of any sewer system before all rights-of-way are obtained.

d) Improvement plans submitted for checking will be reviewed in detail by the District.

1) The Developer or his Consulting Engineer will be notified of defects, deficiencies, omissions, changes or corrections required to be made to the plans in order to obtain the District's approval.

2) One or more iterations of changes or revisions or re-submittals may be required to perfect the plans.

3) When the improvement plans are determined to be satisfactory, the Developer or his Consulting Engineer will be notified that the plans may be submitted to the District for approval.

4. For District Approval, the Developer or their Consulting Engineer shall present to the District:

a) Two (2) full size sets of and two (2) half-size (scalable) sets paper prints of the full set of improvement plans.

b) The original of the cover sheet or title sheet of the plans, bearing the District's standard approval signature block, for approval.

c) The District will sign the original cover sheet or title sheet and will retain the paper prints for District use.

d) Immediately after full approval by all agencies involved, the Developer shall submit to the District, one full set of paper prints of the approved plans and the project specifications.

5. The balance of the District's final estimated processing fees shall have been paid to the District at the time of approval of the plans.

DRAFT

a) Plans will not be signed until all fees are paid.

6. Construction may be initiated after approval of the plans.

   a) Construction shall be initiated, and substantial progress made in the construction of the sewer facilities, within one year of the date of approval of the plans.

   b) Projects or portions of projects which, in the judgment of the District, have not been initiated and substantial progress made in the construction of the sewer facilities within one year, may be voided as to the approval of plans and the Developer shall resubmit the plans for re-approval in accordance with all the current procedures and standards just as if the plans were never previously approved.

   c) New plan checking fees and inspection fees may be charged, and all unexpended previous fees may be forfeited to the District.

7. Sewer facilities shall be constructed in accordance with the approved plans.

   a) No change or deviation from the approved plans will be permitted except for revisions approved in writing by the District.

   b) District approval shall be obtained by submitting, in a timely fashion, revised drawings, adequately and properly identified as to the number and content of the revision, to the District for review.

   c) District's approval of the revision will be indicated by signature in the District's standard revision approval signature block, to be provided on each such revised plan sheet by the Consulting Engineer.

   d) Changes involving revisions of specification text only will be approved by letter by the District.

8. Upon completion of construction, the following items shall be submitted to the District:

   a) A PDF set of the original plans showing all changes made during construction and labeled "As Built Plans" or "Record Drawings".

   b) A digital version of the above listed improvement plan drawings (Full and complete with all integral layers.) on DVD in AutoCad 2016 Format as either .DWG or .DXF files and PDF version on DVD.

      1) The digital drawings shall be projected in the SPMUD Coordinate System, which is based on the California State Plane Coordinate System, Zone 2, NAD 1983.

   c) Payment of all supplemental fees owed to the District.

DRAFT

d) Fully executed Bill of Sale.

e) A paper copy and one (1) .PDF version on DVD of the recorded final map of the development.

f) Other instrument(s) evidencing the creation of easements and rights-of-way for public sewers.

9. The completed public sewer facilities shall be turned over to the District in a complete and ready for operation condition.

   a) Formal acceptance of the public sewer facilities, by Bill of Sale, shall be made by the District Board of Directors.

1.14 Improvement Plan Revisions During Construction:

A. Should changes become necessary during construction, the Consulting Engineer shall first obtain the consent of the District and shall then resubmit the title sheet and the plan sheets affected for approval.

B. The changes on the plans shall be made in the following manner:

   1. The original proposal shall not be eradicated from the plans but shall be lined out.

   2. In the event that eradicating the original proposal is necessary to maintain clarity of the plans, approval shall first be obtained from the District.

   3. The changes shall be clearly shown on the plans with the changes and approval noted on a revision signature block.

   4. The changes shall be identified by the revision number in a triangle delineated on the plans adjacent to the change and on the revision signature block.

   5. Minor changes that do not affect the basic design or contract may be made upon the authorization of the District.

   6. The District may order changes in the plans in order to complete the necessary facilities to meet District requirements.

      a) Changes in the plans ordered by the District shall conform to all of the above.

1.15 Conflicts, Errors & Omissions:

A. Excepted from approval are any features of the plans that are contrary to, in conflict with, or do not conform to California State Law, District Code or Resolution, conditions of approval, or generally accepted good engineering practice, in keeping with the standards of the profession, even though such errors, omissions or conflicts may have been overlooked in the District's review of the plans.

DRAFT

1.16 Sewer Annexation Requirements:

A. When sanitary sewer plans are submitted for an area that is not within the South Placer Municipal Utility District, said plans will not be approved until annexation has been approved by the District or unless the service to an area outside the District or importation of flows is in accordance with an existing approved contact or agreement between the District and the agency having jurisdiction for sewer service in the area outside the District.

1.17 Existing Utilities:

A. All existing utilities shall be shown on the plans.

   1. In addition, the Consulting Engineer shall submit prints of the preliminary and approved plans to the utility companies involved. This is necessary for the utility companies to properly review the plans.

B. All existing sewer facilities impacted by new construction (e.g., connected to, adjusted, repaired, modified) shall be constructed to comply with the District's current Standards.

1.18 Partial Plans:

A. Where the improvement plans submitted cover only a portion of the ultimate development, the plans submitted shall be accompanied by the approved tentative plan or a study plan if there is no approved tentative plan showing topographic features of the ultimate development at an adequate scale to clearly show the proposed improvements.

1.19 Other Agency Notifications:

A. The Consulting Engineer is responsible for obtaining the approval and necessary permits of all governmental or municipal agencies when their facilities are involved.

1.20 Summary of Plan Submittal & Approval:

A. Submit the following items as required by e-mail or to the District, to the South Placer Municipal Utility District office, 5807 Springview Drive, Rocklin, California 95677:

   1. The non-refundable processing fee deposit.
   2. Improvement plans in a PDF file format.
   3. One copy of sewer study plan and calculations.
   4. Engineer's sewer construction cost estimate.
   5. One copy of preliminary subdivision map.

DRAFT

6. Soils Report

7. Additional items as may be required by the District.

B. The District will check the plans and return comments to the Consulting Engineer.

1. The District will work directly with the Consulting Engineer until plans are acceptable.

C. Upon acceptability of the plans by the District, submit original cover sheet or title sheet and 2 copies of construction plans to the District for signature.

1. The following are required at the time plans are submitted for approval:

a) Pay final or estimated final processing fees.

b) Pay other fees as may be applicable to the project.

c) Submit other items specific to the project as may be required by the District. (Example: easement documents, State and Federal agency permits.)

d) A full digital version (complete with all layers), and one PDF version of the original improvement plan drawings on CD or DVD media in AutoCAD format as either .DWG or .DXF files in California State Plane Coordinate System, Zone 2, NAD 1983.

2. Upon approval, the District will return the signed cover sheet or title sheet to the Consulting Engineer.

DRAFT

SECTION 2: MATERIALS

2.01 Sewer Pipe and Fittings:

A. Sewer pipe and fittings shall be as designated in the Special Provisions, in the Proposal, or shown on the plans, and shall meet the appropriate specification as specified below.

B. A certificate of compliance signed by the manufacturer of the material or the manufacturer of assembled materials may be required to be furnished to the District. The certificate shall state that the materials involved comply in all respects with the requirements of these specifications.

C. All pipe, fittings and materials furnished by the Contractor shall be new, high grade, free from defects and shall be clearly marked with the name or trademark of the manufacturer.

1. Vitrified Clay Pipe

a) Vitrified clay pipe and fittings shall conform to and meet all of the requirements of ASTM Designation: C700, Standard Specification for Vitrified Clay Pipe, Extra Strength, Bell and Spigot and shall conform to all data contained in the Materials Section of the current Clay Pipe Engineering Manual published by the National Clay Pipe Institute. (Approved for construction of trunk sewers, collector sewers, and lower and upper laterals unless otherwise specified by the District).

b) Joints in vitrified clay pipe shall be a factory applied resilient-type plastic compression type that conforms to ASTM Designation: C425.

c) All joints shall be tight fitting, watertight, and without imperfections.

1) Only manufacturer recommended lubricants shall be used.

d) Compression couplings for plain end pipe shall conform to ASTM Designation: C 425 and C 1173 for molded rubber sleeve and A 240 for stainless steel bands and nuts, and shall be the adjustable repair type coupling. Couplings shall be Fernco 1000 RC and/or 5000 RC Series couplings or approved equal.

e) The pipe shall not deviate from a straight line by more than 1/16-inch per foot.

f) Imperfections in pipe and fittings containing blisters, cracks or chips shall be adequate cause for rejection.

2. Ductile Iron Pipe

a) Ductile iron pipe for sewers shall conform to ANSI/AWWA Standard C151/A21.51 requirements. (Approved for construction of trunk sewers, collector sewers, and lower and upper laterals unless otherwise specified by the District).

DRAFT

b) Ductile iron fittings and special fittings shall conform to ANSI/AWWA Standard C110 requirements.

c) Flanged ductile iron pipe and fittings shall conform to ANSI/AWWA Standard C115 requirements.

d) Ductile iron pipe shall be pressure Class 150 minimum unless otherwise shown on the plans.

e) Joints for ductile iron pipe shall be either mechanical joints or push-on joints conforming to ANSI/AWWA standard C111 requirements or flanged joints conforming to ANSI/AWWA standard C110 or C115 requirements.

f) Asphaltic outside coating shall be in accordance with ANSI/AWWA C151/A21.51 and ANSI/AWWA C110/A21.10 or ANSI/AWWA C153/A21.53 for fittings.

g) Ductile Iron pipe shall be ceramic epoxy lined pipe and shall have a nominal lining thickness of 40 mils and shall be Tnemec Series 431 Perma-Shield PL or approved equal.

3. Any linings or coatings damaged in the field from installation shall be repaired by cleaning to bare metal and touched up using manufacturer's repair kit to a 40-mil nominal coating. The District reserves the right to reject piping or fittings due to field or shipping damage of the protective coating system.

4. <u>PVC / SDR 26 (PS 115) Pipe</u>

a) PVC pipe and fittings shall be solid-wall and made of compounds conforming to ASTM D1784 and in accordance with ASTM D3034 or ASTM F679 and ASTM D1784 in physical, dimensional and chemical requirements.

b) Joints shall be elastomeric gasketed, bell-and-spigot joints, push-on type providing a watertight seal.

c) Couplings for plain end pipe and/or repairs shall be of the heavy walled type Gasket X Gasket without stop "Slip/Slip without Stop".

d) Pipe stiffness shall equal or exceed 115 lbs / in-in.

e) PVC gravity sewer pipe shall conform to ASTM D3034 SDR 26 for diameters up to fifteen inches (15").

f) PVC gravity sewer pipe shall conform to ASTM F679 PS 115 for diameters eighteen inches (18") up to forty-eight inches (48").

g) The standard laying length shall be a minimum of 14-feet (14').

DRAFT

5. PVC / C900

   a) PVC pipe and fittings shall be solid-wall and made of compounds conforming to ASTM D1784 Cell Class 12454 and in accordance with ANSI/AWWA C900-16 and ASTM D1784 in physical, dimensional and chemical requirements.

   b) The gasket shall be reinforced with a steel band and meet the requirements of ASTM F477. Pipe shall have an integral bell end and shall meet the joint requirements of ASTM D3139.

   c) Pipe shall be provided in a green color.

   d) The nominal laying length shall be 20-feet (20').

6. ABS / Schedule 40 (Approved for construction of upper lateral only).

   a) Pipe and fittings shall be made in conformance with ASTM D2661-14e1. (

   b) Joint cement shall be as approved by the manufacturer.

7. DWV / Schedule 40 (Approved for construction of upper lateral only).

   a) Pipe and fittings shall be made in conformance with ASTM D2665-20

   b) Joint cement shall be as approved by the manufacturer.

8. PVC / Schedule 40 (Approved for construction of ejector system force main only).

   a) Pipe and fittings shall be made in conformance with ASTM D1785 – 15e1.

   b) Joint cement shall be as approved by the manufacturer.

D. All service connections shall be installed with "WYE" fittings.

E. Solvent welded saddles are prohibited unless approved by the District

F. Lubricant shall be as recommended by the pipe manufacturer.

2.02 Pipe Fittings and Miscellaneous Pipe Facilities:

A. All pipe fittings and joints, including the maximum deflection of joints in curved alignments, shall be in accordance with accepted best practice. Care shall be used to prevent chipping, cracking, or deformation of either end of the pipe during installation. Adjacent pipes at each joint shall be concentric. Maximum allowable eccentricity is one percent of pipe I.D. or 3/16-inch, whichever is greater. Greater eccentricity shall be corrected.

   1. Transition Joints

DRAFT

a) When approved for use by the District, transition joints between different pipe materials shall be Fernco 1000 RC and/or 5000 RC Series couplings or approved equal.

b) Where necessary, proper adapters shall be used.

2. Pipe to Manhole Connector

a) A minimum structural leg of six inches of concrete (as measured on the interior wall of the manhole structure) shall be provided/maintained between pipe penetrations.

b) Pipe to manhole connector shall be integral to the base and shall be a cast in gasketed bell or gasketed fitting as approved by the District.

c) The use of flexible rubber connector (boot) is not permitted, except for use on manhole barrel sections, cored for the installation of a drop connection, when approved by the District.

3. Pipe fittings

a) All fittings used shall be specifically designed, approved or recommended by the manufacturer for use in handling sewer or for the purpose intended.

b) Fitting material shall match pipe material unless otherwise permitted by the District.

c) Mechanical joints shall not be used unless approved by the District.

4. Locating Cable

a) Where specified, locating cable shall be laid 6” over pipe or secured to non-metallic pipe. Locating cable shall be direct burial, copper, No. 10 insulated. The cable shall be procured from the vendor complete with an approved epoxy splice kit and all joints shall be spliced in accordance with manufacturer’s recommendations to form a continuous run the entire length of the line as specified.

5. Warning Tape

a) Warning tape shall be installed approximately 1-foot above the pipe after initial backfill is placed and shall run continuously along the length of the pipe and all related appurtenances.

b) Warning tape shall be green and state “CAUTION: SEWER LINE BURIED BELOW”.

c) The tape shall be 6” wide and consist of a minimum 5.0 mil, five-ply 100% virgin polyethylene which is acid, alkaline and corrosion resistant. Elongation

DRAFT

and tensile strength of not less than 7,800 PSI shall be in accordance with ASTM D882-80A.

6. System Plugs

a) All plugs used shall be of the mechanical type and specifically designed, approved or recommended by the manufacturer for the purpose intended.

2.03 Conductor Pipe:

A. Unless otherwise specified on the plans, by supplemental drawings, or by permit, steel casing shall be used in the jacking operation. The size (I.D) shall be as shown on the contract documents. In no case shall the thickness of the casing be less than 1/2". The Contractor shall be fully responsible for the sufficiency of the casing provided.

2.04 Force Main Pipe:

A. Pipe used in the construction of force mains shall be either: ductile iron with approved lining, or Poly Vinyl Chloride (PVC) Pipe C-900. Fittings shall conform to the requirements of the applicable sections of these specifications.

B. Design head shall be as specified on the plans.

1. Pressure rating of force main pipe shall be 150 percent of design head.

C. Poly Vinyl Chloride (PVC) pipe used for sewer force mains shall be solid wall, hydrostatically tested and meet AWWA C-900Standard Specifications for Polyvinyl Chloride (PVC) pressure pipe. In all cases, PVC C-900 shall have a minimum dimension ration of 18 (DR18).

D. Joint restraints shall be designed by the Design Engineer and specified on the plans.

2.05 Precast Reinforced Concrete Manholes:

A. The standard size precast reinforced concrete manhole shall be 48-inch inside diameter. The manhole shall consist of cylindrical sections, concentric tapered cones, and ring sections, all with tongue and groove joints. Larger manholes may be required as designated in the sewer design section.

B. Manholes shall conform in materials and design to applicable portions of ASTM Designation: C478 with the exception that the cement shall be Type II, and a single-line circular reinforcement as specified for Class II, inner cage, shall be used. Wall thickness shall be a minimum of 4-inches for 48-inch manholes and 5-inches for 60-inch manholes or 1/12 times the inside diameter, whichever is greater.

C. The internal diameter of manhole sections, cones, and rings shall not vary more than one percent from the nominal diameter. The wall thickness shall be not less than the nominal dimension by more than 3/16-inch for 48-inch manholes or more than 1/4-inch for 60-inch manholes. The single line reinforcement shall be placed within the

DRAFT

center one-third of the wall. Manhole sections shall be manufactured without steps or rungs.

D. The interior finish shall be sacked at the point of manufacturing to provide a smooth and void free surface.

2.06 Sealing Compound:

A. Preformed plastic sealing compound used for sealing joints shall meet Federal Specifications SS-S-00210 “Sealing Compound Preformed Plastic for Pipe Joints”, Type I, and shall be as manufactured by Henry Company (K. T. Snyder Co., Inc.) “Ram-Nek” or equal.

2.07 Joint Wrap:

A. Joint wrap shall be Henry Company Sealants Division “RUB’R-NEK” external concrete joint wrap (6” minimum width) or approved equal.

B. A manufacturer approved primer shall be used prior to application of the joint wrap.

2.08 Concrete:

A. Concrete for manhole base material shall meet ASTM C94, Alternate 2 specifications and the following: Compressive strength of 2,500 psi at 28 days, maximum aggregate size 1 ½-inch, slump 4-inch maximum as determined by ASTM C143 (12” slump cone), cement ASTM C150, Type II, minimum cement content 564 pounds per cubic yard, water cement ratio of 0.49.

2.09 Mortar:

A. Mortar shall be standard premixed meeting ASTM C387, or proportioned 1 part Portland cement to 2 parts clean, well graded sand which will pass a 1/8-inch screen. Minimum compressive strength shall be 1,800 psi at 28 days.

B. Admixtures may be included but shall not exceed the following percentages of the weight cement: 10 percent hydrated lime, 5 percent diatomaceous earth.

2.10 Reinforcing Steel:

A. Reinforcing steel shall meet ASTM A615, Grade 40, deformed bars.

2.11 Liner Coating:

A. The anti-corrosive product selected for the interior coating of any concrete structure shall meet the following characteristics:

1. Highly resistant to corrosive conditions, especially hydrogen sulfide gases, and similar gases common to the wastewater industry.

2. Suitable for application in a damp environment.

DRAFT

3. Prohibits water penetration.

4. Highly resistant to abrasion, impact and chemical attack.

5. Non-supportive of bacterial growth.

B. The following products, or approved equals, are acceptable for use if applied in strict conformance with the appropriate manufacturer's specifications, and testing procedures:

1. Hydro-Pox CT.04-204UHB distributed by Con-Tech of California Inc. or approved equal.

2. Kerneos, Inc – SewperCoat. 2000 HS Regular or approved equal.

3. Ameron International T-Lock Protective Liner or approved equal.

C. All horizontal surfaces shall be non-skid as specified by the manufacturer and approved by the District.

D. Shop drawings, specifications, literature and other information shall be submitted to the District for review and approval prior to commencement of work. Shop drawings and manufacturer specifications shall detail the method of surface preparation, application, thickness, number of coats, inspection criteria and all pertinent data. No product shall be used without the District's approval.

2.12 Manhole Frames and Covers:

A. Manhole frames and covers shall conform to the following:

1. Cast Iron

a) Manhole frame and cover sets shall be Cast Iron conforming to ASTM A-48 Class 35B. Each set shall be manufactured in the United States of America, shall be machined and the cover shall seat firmly into the frame without rocking or rattling and be free from defects. The frames and covers shall be coated with a commercial quality black asphalt or bituminous paint. The foundry, heat, date and, country of origin marks in compliance with federal regulations, shall be cast in each frame and cover. The letter "S" or the word "SEWER" shall be cast in the cover.

b) For 48-inch diameter manholes, frame and cover set shall be South Bay Foundry A 51, D & L Supply A-1021 or approved equal, 26" diameter covers with edge pry (EP) hole unless approved by the District.

c) For 60-inch diameter and larger manholes, frame and cover set shall be South Bay Foundry SBF 1325 (3 Pc), D & L Supply A-1426 (3 Pc), bolt down, or approved equal.

DRAFT

d) Bolt down covers with stainless steel bolts are required in unimproved areas per Sections 3.07 and 5.22 of these specifications or as directed by the District.

2. Composite

a) Composite manhole frames, covers and risers shall be heavy duty rated for AASHTO H20 highway loading and shall be designed, manufactured, and tested with a 40,000 lb. proof load test in accordance with AASHTO M306. A report from an independent test laboratory shall be provided. Each set shall be manufactured in the United States of America and at a minimum be marked with the following: name of the manufacturer, country of manufacture, material designation, individual part number, and the letter “S” or the word “SEWER” on the cover.

b) For 48-inch diameter manholes, frame and cover set shall be EJ GMI 2600 Durostreet, confined space entry with 2-1/4 turn Titus TwistLift latches and 24” clear opening or approved equal.

c) For 60-inch diameter manholes, frame and cover set shall be EJ GMI 3800 Durostreet, confined space entry with 2-1/4 turn Titus TwistLift latches and 36” clear opening or approved equal.

d) There shall be no possibility of corrosion welding between the cover and frame. Gasket systems shall be integrated to reduce traffic shock and abatement of noise and malodors.

e) Static Coefficient of Friction shall conform to ASTM C1028, in both wet and dry applications.

f) The installation of composite manholes requires District approval.

B. Frames and covers not conforming to this specification will be rejected by the District.

C. The frame and cover shall be made by the same manufacturer.

DRAFT

SECTION 3: DESIGN

3.01 Sanitary Sewer System Design Standards:

A. These design criteria shall govern the engineering design of Public sanitary sewer projects which will be dedicated to South Placer Municipal Utility District, and private sewer systems requiring District approval.

3.02 Average Flow Determination:

A. Flow determination shall be based upon the most recent zoning. The minimum population density used shall be equivalent to that of single-family zoning. The area shall be examined for trends toward population concentration and, if found, an estimate should be made of the probable extent of such concentration. This estimate shall be used as a basis for determining flow.

1. Single Family and Duplex Units

   a) Flow shall be based on 4 persons per residential unit, 100 gallons per person per day, and 4 lots per acre. However, if the number of units is known, and is greater than 4, the actual number shall be used.

2. Single Family, Planned Unit Development

   a) Flow per unit shall be the same as above and the actual number of units per acre shall be considered. However, in the absence of known data, the density shall be assumed to be 12 units per acre.

3. Commercial and Multiple Residential

   a) Flows shall be determined from the curves on Standard Drawing No. 1. However, if the type of planned improvements are known and estimated discharges are available, they shall be used in the design, subject to the approval of the District.

   b) Multiple residential is differentiated from planned unit developments in that the latter contain individually owned residences with the adjacent land owned in common and with maintenance performed by a homeowner's association.

      1) Multiple residential is designed to be owned by one party with the individual residences rented or leased.

      2) The average flow from single bedroom multiple residential units shall be 200 gallons per day per unit; from 2-bedroom units, 300 gallons per day; and from 3 or more bedroom units, 400 gallons per day.

      3) Mobile home flow shall be 300 gallons per day per unit.

DRAFT

c) Arrangements for the connection of facilities with a high discharge rate or with a type of discharge that could be detrimental to the public system shall be subject to the approval of the District.

4. Schools

a) The larger flow, as determined from one of the following methods, shall be used:

1) The entire school area shall be assumed to contribute an average flow equivalent to that of an equal area of single family, detached residential units (i.e. 1600 gallons per acre per day.)

2) Average daily flow per school shall be based on the type of school as follows, with the indicated capita limits including ultimate student population plus administration, teaching and operating personnel:

TYPE OF SCHOOL	AVE. DAILY FLOW	CAPITA LIMIT
Elementary (K-5, K-6 or K-8)	0.025 MG	1,000
Upper Elementary (6-8, 7-8 or 7-9)	0.060 MG	1,500
High School (9-12 or 10-12)	0.080 MG	2,000

b) For enrollments and personnel in excess of that indicated, there shall be added 25 gallons per day per additional capita in elementary schools and 40 gallons per day per additional capita in upper elementary and high school.

5. Industrial

a) Every attempt should be made to base flows on specific, known industrial development.

b) In the absence of specific information, the flow shall be determined from the curves on Standard Drawing No. 1.

DRAFT

c) Special attention shall be given to any facilities with a magnitude or type of discharge that could be detrimental to the public system.

3.03 Design Flow:

A. Average flow, as determined above, shall be multiplied by the peaking factor obtained from the curve on Standard Drawing No. 2 to obtain design flow.

3.04 Pipe Slope, Velocity and Size:

A. Design criteria for collector pipe are as follows:

1. Size

a) Minimum size of collector sewers that serve single family homes shall be 6-inch diameter.

b) Duplex development shall be 6-inch diameter minimum.

c) Schools, commercial, industrial, and multiple residential shall be served by lines 8-inch diameter, minimum.

d) Single commercial buildings which contribute negligible sewerage flow, when among single family or duplex development, may be served by a collector sewer 6-inch diameter minimum with District approval.

e) For pipe in inaccessible areas or in areas with restricted access, larger diameter pipes may be required by the District.

2. Slope and Velocity

a) Minimum velocity shall be 2.0-feet per second (fps) when the pipe is flowing half full or full. Manning's formula shall be used to determine the relation of slope, design flow, velocity, diameter, and "N" value. The "N" value shall be considered 0.013 for all pipe materials, for design purposes.

b) Following is a table of slopes and design flow capacities for various pipe diameters. Pipe slopes less than those listed in this table shall not be used without the approval of the District. The slopes indicated are based on a velocity of 2 fps with the pipe flowing full.

DRAFT

Pipe Diameter (Inches)	Slope (foot per foot)	Capacity at 0.7 depth (MGD)	Capacity flowing full (MGD)
6	0.0050	0.22	N/A
8	0.0035	0.38	N/A
10	0.0025	0.58	N/A
12	0.0020	0.85	1.00
15	0.0015	1.32	1.60
18	0.0012	1.95	2.35

c) Any 6-inch line with ten (10) or fewer connections, including connections on contiguous lines upstream, shall have a minimum slope of 0.0075.

3. Capacity

a) Pipe capacity, in all cases, shall be adequate to carry design flow from the entire tributary area, even if said area is not within the project boundaries.

1) Structures, tanks, wet wells or other facilities used to provide storage of sewage, peak flows or otherwise are prohibited.

2) No sewer plan in which proposed design flows exceed pipeline peak flow capacity will be approved.

3) The maximum depth of flow at design conditions:

(a) In any collector sewer (10-inch diameter or less) shall be 0.7 diameter.

(b) Trunk lines (12-inch diameter or larger) may be designed to flow full unless direct service sewer connections to the trunk are planned and approved, in which case the 0.7 diameter maximum depth shall govern.

4. Depth

a) In the design of a system, one of the controlling conditions shall be that the collector sewer shall be at sufficient depth to provide a minimum slope for the building sewer of 1/4-inch per foot (2%), at the same time maintaining a minimum cover of 12-inches over the building sewer at any buildable location within the properties to be served.

b) The maximum depth of public sewer lines shall be twenty-five (25) feet, provided that easement requirements can be met (reference SECTION 6:) and

DRAFT

subject to approval by the District. Factors to consider when designing sewer alignment include future/proposed improvements, other utilities, topography, etc.

c) In situations where the proposed depth of the sewer line exceeds twenty-five (25) feet, other alternatives may be required, including construction of a public wastewater pump station (reference Section 4).

5. Material

a) Pipe material shall be as approved by the District and shall conform to the requirements of the Materials Specifications (SECTION 2:).

3.05 Sewer Location and Alignment Requirements:

A. Requirements for location and alignment of sanitary sewers are as follows:

1. General

a) All sanitary sewers shall be placed within rights-of-way dedicated for public streets unless the use of easements is specifically approved by the District.

b) Consideration shall be given for future development when locating manholes in new lines.

c) No manhole shall be located in an area where access would be restricted in a manner preventing routine maintenance.

d) All utility crossings shall be designed with the crossing being perpendicular, unless a variance is approved by the District. In no case shall pipes cross at less than a 45-degree angle.

e) There shall be a minimum horizontal clearance of five (5) feet between parallel sewer and all other utilities, as measured between the outside barrels of the pipes and manholes, unless otherwise approved by the District. Additional clearance may be required when the depth of the sewer or other utilities exceeds ten (10) feet.

f) There shall be a minimum horizontal clearance of ten (10) feet between parallel water and sanitary sewer facilities, as measured between the outside barrels of the pipes and manholes, and the water main shall be higher than the sewer.

1) On crossings, the water line shall be at least 12-inches above the sewer line.

(a) If a sanitary sewer force main must cross a water main, the sewer force main shall be installed a minimum of one foot below the water main unless otherwise approved by the governing Health Department and water purveyor.

DRAFT

(b) In no case shall the requirements be less than called for in the California Department of Health Services Criteria for Separation of Water Mains and Sanitary Sewers, latest edition.

2. Location in New Subdivisions

a) In new subdivisions, sewers shall preferably be located 6-feet off of street centerline within minor and primary streets.

b) The outside barrel of the pipes and manholes shall be located at least five (5) feet from the concrete improvements such as the lip of gutter. In the case where there is no gutter, the edge of pavement or face of curb shall be used.

3. Existing Streets

a) When sanitary sewers are to be placed in existing streets, factors such as curbs, gutters, sidewalks, traffic conditions, pavement conditions, future street improvement plans, and existing utilities shall all be considered.

b) The appropriate governing agency's approval shall be obtained in every instance.

4. Easements

a) Easements shall be granted to the District on all District maintained sewer lines, except when sewer lines are located in public streets, or public rights-of-way.

b) The minimum width of easements shall comply with the requirements of Section 6.04B.

c) Wider easements may be required depending on location, type of soil, size of pipe, manhole location, depth of pipe or as determined necessary by the District.

d) The permanent easement shall be all on one side of the property line or fence line.

e) The sewer pipe shall be installed in the center of the permanent easement unless otherwise approved by the District.

f) Temporary construction easements of adequate dimensions shall be provided to allow the construction within the permanent easement to be completed in a safe and reasonable manner.

5. Water Well Clearance

a) No public sanitary sewer shall be placed nearer than one hundred (100) feet to any water well, public or private, unless the well has been abandoned in full

DRAFT

accordance with County Health Department standards, or the location otherwise approved, in writing, by the appropriate health agencies.

b) If a clearance of less than one hundred (100) feet is approved, all pipe within that distance from the well shall be of ductile iron or of other material approved by the District.

c) In no case will a clearance of less than fifty (50) feet be allowed.

6. Alignment

a) Alignment of all sewer pipe and structures shall be designed as follows:

1) Horizontal Alignment

(a) Alignment shall be parallel to the street centerline wherever possible.

(b) Sewer pipe shall not be placed in excavations that would fall within an imaginary plane projecting downward at an inclination of 1H:1V from the nearest edge of adjacent structures.

(c) Minimum radius for sanitary sewers shall be per manufacturer's recommendations, but in no case less than 200-feet for vitrified clay pipe or PVC pipe, and 205-feet for ductile iron pipe. A larger radius shall be used whenever practical.

(d) A manhole shall be placed at any abrupt change in alignment.

(e) Changes in alignment of pipe 27-inches in diameter and larger shall be by use of manholes, or by other methods as approved by the District.

(f) All utility crossings shall be designed with the crossing being perpendicular, unless a variance is approved by the District. In no case shall pipes cross at less than a 45-degree angle.

(g) Sewer facilities shall not be placed in any joint trench with other utilities.

2) Vertical Alignment

(a) Alignment shall provide a constant slope between manholes.

(b) If a change in grade is necessary, construction of a manhole will be required.

(c) Vertical curves shall not be used unless specifically approved by the District.

(1) In such case, elevations shall be shown at 10-foot intervals throughout the length of the vertical curve.

DRAFT

(2) The maximum algebraic difference in grades shall be 2 percent at each 10-foot interval.

3) Clearance Requirements

(a) All sewer pipe and structures shall be designed to provide a minimum 12-inch vertical clearance from all other utilities and/or improvements, unless otherwise approved by the District.

(b) Whenever clearance between the new sewer and utilities is less than 12-inches, extra strength pipe shall be used for the entire run, manhole to manhole.

(c) In the case of new development, whenever any new utilities are at an elevation below the sewer and are or can/will be installed after the sewer, the sewer shall be ductile iron pipe.

(d) In the cases where new utilities will cross an existing sewer, the existing sewer shall be potholed in the presence of the District to determine and verify location, depth, and clearance between the sewer and the new utility.

3.06 Trench Loading Conditions and Pipe Design:

A. The loading condition and pipe design criteria for conduits are as follows:

1. Rigid Conduit Loading

a) On rigid conduits, Marston's formula shall be used to determine the load placed on the pipe by the backfill.

1) The procedure for rigid pipe is described in the ASCE Manual of Engineering Practice No. 37, the Clay Pipe Engineering Manual, and in similar handbooks.

b) In the absence of specific soil data, as determined by a registered engineer specializing in soil mechanics, soil weight of 120 pounds per cubic foot (pcf) and a Ku factor of 0.11 shall be used.

2. Safety Factor

a) On rigid conduits, a safety factor of 1.5 shall be used for all pipes.

b) Only the three edge bearing strength of the pipe shall be used in the computations for rigid pipe.

3. Bedding and Initial Backfill

a) Bedding types and factors shall be as per Standard Drawing No. 4.

DRAFT

b) Bedding and initial backfill type shall be as necessitated by height of cover over the pipe, trench width, pipe strength, and other factors used to determine safe pipe loading.

c) Special attention shall be given to backfill requirements for pipe located in State rights-of-way and for pipe placed in areas where trench width is excessive, such as in the vicinity of bore pits.

d) Any special backfill requirements shall be noted on the plans.

e) Unless otherwise noted on the plans, bedding and initial backfill shall be Type II with an unlimited trench width allowable for loading purposes, but subject to limitations relative to trench width for construction purposes as set forth in these Specifications.

f) The minimum trench width shall be pipe O.D. plus 12-inches.

g) Type III and IV pipe bedding and initial backfill shall require specific approval of the District before use.

1) These bedding types are intended primarily for emergency field use and their use shall normally not be specified on the plans.

4. Special Pipe Strength Requirements

a) Ductile iron pipe with approved lining or other high-strength pipe with engineered bedding, as designed by a licensed engineer and approved by the District, shall be used whenever cover is 20-feet or greater or extra support strength is required, as determined by the District.

b) Ductile iron pipe with approved lining or other high-strength pipe approved by the District shall be used whenever cover is less than 3-feet, or less than 12-inches of clearance exists between the sewer pipe and other utility pipelines. Manholes, vaults, structures, footings, etc. are not permitted to be constructed over sewer pipelines.

1) Localized mounding to achieve three (3) feet of cover will not be acceptable.

c) The District may require the use of ductile iron pipe in other situations.

5. Design Guide

a) A table which relates cover, pipe diameter, trench width, and bedding and initial backfill type for vitrified clay pipe, according to Marston's formula, is provided on Standard Drawing No. 3.

3.07 Manhole Criteria:

A. The design criteria for manholes are as follows:

DRAFT

1. General

   a) Manholes shall be placed at:

      1) The intersections of all sanitary sewer lines

      2) At all changes in pipe size

      3) At the end of any line terminating with a cul-de-sac

      4) At the end of all permanent lines with any building sewer connections

      5) At the end of any temporary line more than 200-feet in length.

   b) All manholes from which sewer line extensions are anticipated shall have a pipe stub installed at the grade and in the direction of the anticipated extension.

   c) All manholes shall be located in such a manner as to be readily accessible by maintenance equipment/vehicles at all times, as determined by the District.

2. Spacing

   a) Maximum spacing of manholes shall be 400-feet for all straight lines.

   b) A line with a radius greater than 400-feet shall be considered as straight for purposes of this section.

   c) Manhole spacing on lines that are on a continuous curve of 200-foot radius shall be 200-feet.

   d) Manhole spacing on curved lines of radius between 200 and 400-feet, or where only a portion of the line is curved, shall be adjusted proportionately.

   e) Reverse curves require a manhole at the point of tangency between the curves.

   f) A manhole shall be required at any change in vertical alignment, unless use of a vertical curve is approved by the District.

   g) A manhole shall also be placed at any change in horizontal alignment.

3. Elevations Criteria

   a) Where the flow of a single line must change direction 20 degrees or more the invert of the exit pipe shall be at least 0.10-foot below that of the entrance pipe.

   b) Where two or more lines of the same size enter a manhole, the invert of the exit pipe shall be at least 0.10-foot below that of all the entrance pipes.

DRAFT

c) If any entering pipe is smaller in diameter than the exit pipe, the minimum invert differential shall be based on the crown of that entering pipe matching the crown of the exit pipe.

d) In cases where the exit pipe diameter is 12-inch or larger, the minimum invert of all 6-inch and 8-inch pipe entering the manhole shall match the crown of the exit pipe.

e) When the entering pipe slope is 7.5 percent or steeper, the invert of the exit pipe shall be at least 0.30-foot below the invert of all the entrance pipes.

4. Size Criteria

a) Precast reinforced concrete manholes shall be 48-inch inside diameter when the largest size pipe entering the manhole is 21-inches in diameter, and (minimum) 60-inch inside diameter for pipe sizes 24-inch and larger in diameter.

b) Larger diameter manholes may be required as determined by the District.

c) When pipe sizes 18-inch and larger enter a manhole such that the flow of one must change direction by more than 20 degrees, a (minimum) 60-inch manhole shall be used.

d) Sixty-inch manholes or larger shall be used whenever 3 or more 12-inch or larger pipes intersect at a manhole.

5. Construction Requirements

a) Manhole construction shall conform to the provisions of Standard Drawings No. 5 and No. 6.

b) Bolt down type frames and covers with 1/4" 0-ring secured with adhesive shall be used on manholes located in areas subject to flooding.

c) Bolt down type frames and covers shall be used on manholes located in unimproved or backyard easement areas.

d) Where the manhole depth is less than four feet, an 18-inch high cone, as shown on Standard Drawing No. 6, shall be used.

e) The plans shall note that the frame on manholes located in unimproved areas shall be set 6-inches above existing ground level and 12inches above any designated 100-year flood plain.

f) The area adjacent to the manhole shall be designed and graded to drain away from the manhole.

g) Manholes shall have a lining per Section 2.11 installed under the following conditions:

DRAFT

1) The discharge manhole of force mains.

2) Manholes at significant transitions in pipe slopes.

3) As directed by the District.

3.08 Drop Connection:

A. Drop connections shall only be installed as approved by the District.

B. A drop may be installed whenever a pipe does not enter a manhole in conformance with Section3.07.

C. Drop connections shall conform to Standard Drawing No. 7 or 8.

D. If the drop of the entrance sewer is less than the minimum drop specified in Standard Drawing No. 8, the free drop shall be eliminated by increasing the slope of the entrance sewer.

E. The desirable invert differential shall be the crown of the entrance sewer matching the crown of the exit sewer.

F. The outside drop connection shall only be used as directed by the District.

G. The inside drop connection shall be made in 60-inch and larger manholes.

H. There shall be no more than one 6-inch or 8-inch inside drop connection or two 4-inch building sewer drop connections into a 60-inch diameter manhole. A larger diameter manhole shall be required for additional or larger diameter drop connections.

I. Drop connections with pipe diameters greater than 8-inch require District approval.

3.09 Test Manhole:

A. A test manhole may be required to be installed on all sewer outfall lines at the subdivision boundary when the sewer outfall will be located in unimproved areas.

B. The test manhole will be used to test the sewer outfall before and after the construction of the unimproved areas.

C. Test manholes may be required by the District in other circumstances.

3.10 Flushing Branch:

A. With the approval of the District, a flushing branch may be used in lieu of a manhole as follows:

1. At the end of a line less than 200-feet long if the line extends to the subdivision boundary and there are definite plans for extension of the line.

DRAFT

2. At the end of a temporary line less than 200-feet long.

B. Flushing branches shall conform to Standard Drawing No. 9.

3.11 Building Sewer Lower Lateral Design:

A. The design criteria for lower laterals are as follows:

1. General

a) Lower laterals shall conform to Standard Drawing No. 10 and No. 11 and shall be constructed normal to the collector sewer using Inspection Cleanout as shown on Standard Drawing No. 11 unless otherwise approved by the District.

b) The lower lateral shall extend from the collector sewer to the edge of public right-of-way or edge of easement.

c) Lower laterals shall extend one foot beyond edge of pavement of any private road.

d) A plan and profile of any lower lateral shall be supplied to the District upon request.

e) All lower laterals entering a manhole shall be installed with the lower lateral invert elevation matching the crown elevation of the exit collector sewer.

f) A backwater valve shall be provided on any building sewer where the building pad elevation is lower than the top of manhole immediately up stream on the collector sewer serving the parcel or in instances where the manhole immediately up stream will not provide relief.

1) The parcels or lots requiring backwater valves shall be indicated on the plans.

g) A property line cleanout, conforming to Standard Drawing No. 12, shall be constructed on the lower lateral during building construction at the time of the upper lateral installation, unless otherwise directed by the District.

2. Sizing

a) Residential lower lateral size is 4-inch minimum.

b) Schools, commercial and industrial developments shall be served by 6-inch or larger lower laterals.

c) A 6-inch lower lateral shall enter a 6-inch collector by means of a manhole but may enter an 8-inch or larger collector by means of a factory wye.

d) Eight-inch diameter and larger lower laterals shall be connected to the collector sewer by use of a manhole.

DRAFT

3. Connection Limitations

   a) Lower laterals shall not directly connect to 12-inch diameter or larger pipe or to lines more than 20-feet in depth without the approval of the District.

   b) A separate and independent lower lateral shall be provided for every lot, building or structure.

   c) Two or more buildings located on the same parcel shall have separate lower laterals and each shall be independently connected to a District maintained collector sewer and conform to the requirements of Section 3.04., "Pipe Slope, Velocity and Size", unless otherwise approved or required by the District.

   d) No more than five 4-inch lower lateral connections into precast manhole bases or four 4-inch lower lateral connections into cast-in-place manhole bases will be allowed.

4. Material

   a) If the lower lateral has 3-feet of cover or less over the top of pipe, measured from the gutter flowline, ductile iron pipe, or other high strength pipe approved by the District, shall be used.

   b) In situations where a VCP lower lateral at the right-of-way line/easement line has more than 7-feet of cover over the top of pipe, as measured from existing ground surface or edge of adjacent roadway, ductile iron pipe, or other high strength pipe approved by the District shall be used.

   c) In all other cases, the lower lateral shall be of the same material as the collector sewer to which it connects.

   d) Lower laterals shall not have less than12-inch vertical clearance minimum between any wet utility unless ductile iron pipe is used. In no case shall the vertical clearance be less than 6-inches.

5. Location

   a) When sanitary sewers are constructed as part of new subdivision improvements, a lower lateral shall be constructed to each parcel.

      1) In new subdivisions or developed areas, unless specifically requested otherwise in writing by the property owner or Consulting Engineer, lower laterals shall be placed on the low side of any typical subdivision lot or similar parcel with two percent or greater slope across the front or shall be placed in the center of lots of lesser slope.

   b) Consideration shall be given to trees, improvements, other utility service points or other natural barrier, so as to minimize interference when the service building sewer upper lateral is extended to serve the building.

DRAFT

c) If the property is located such that service is available both to a line located in an easement and in a street right-of-way, service shall be to the line located within the street unless otherwise approved by the District.

d) No lower lateral shall be located such that future onsite construction will result in the line being in such proximity to a water well or water main or service where applicable health standards will be violated.

e) Lower laterals shall not be placed in any joint trench with other utilities.

6. Depth

a) The Consulting Engineer shall verify the adequacy of the normal lower lateral depth at the edge of the easement or right-of-way to serve the intended parcel.

1) A depth of 4-feet to crown of pipe, measured from existing ground surface or edge of adjacent roadway at the right-of-way line/easement line, whichever is lower, shall be considered normal lower lateral depth.

2) Lower laterals shall not exceed 7-feet in depth, as measured at their terminus at the right-of-way line/easement line, unless otherwise approved or required by the District.

3) The Consulting Engineer shall designate the invert elevation of the lower lateral at the edge of the right-of-way or easement on the construction plans.

b) At locations where gravity service is impossible or impractical to obtain, the Consulting Engineer shall clearly indicate on the plans the parcels that will require a privately owned and maintained pump station.

c) If a joint trench is being utilized for other utilities, the Consulting Engineer shall indicate on the plans that a joint trench will exist and shall adjust lower lateral elevations as necessary.

1) It shall be the responsibility of the Consulting Engineer to arrange for coordination of the grade of utilities located in the joint trench and the lower laterals.

7. Slope

a) The 4-inch lower lateral slope shall be 1/4-inch per foot minimum; 1/8-inch per foot slope may be used with the approval of the District.

b) Lower lateral slope for 6-inch or larger services may be engineered slopes with a minimum velocity of 2-feet per second with the pipe flowing full or half full.

8. Regulations and Fees

a) For regulations and fees regarding the installation of an individual lower lateral, contact the South Placer Municipal Utility District.

DRAFT

3.12 Creek Crossing Design:

A. The design criteria for creek crossings are as follows:

1. General

a) In all cases, the proposed future creek bed elevation shall be used for design purposes.

b) If the pipe must cross above the creek bed, a design for the crossing shall be submitted by a registered engineer, competent in the field, for District approval.

c) Crossing details of pipe, piers, anchorage, and other pertinent items shall be shown upon a detail sheet of the plans in large scale.

2. Construction and Materials

a) For all line sizes, ductile iron pipe shall be used.

b) Special care shall be taken to provide a firm base for the pipe bedding.

1) The plans shall specify that all soft or organic material within the creek banks shall be replaced with select imported backfill.

2) The top 2-feet of backfill within the full width of the creek banks shall be placed and compacted gravel 3/4-inch to 1 1/2-inch size.

c) Unless otherwise directed, a trench plugs shall be required around the pipe at the downstream side of the crossing.

1) Trench plugs (cutoff collars, cutoff walls) shall be two-sack sand-cement slurry and shall be 4-feet long, shall key 18-inches into the trench walls and bottom, and shall extend 18-inches above the pipe crown. Trench plugs shall be installed at crossings of streams, ditches, canals, or other sources of groundwater, or as requested by the District, and shall include drains.

d)

e) As determined by the District, sewer pipes at all creek crossings and drainage swales may require concrete erosion protection per Standard Drawing No. 18 to reduce erosion and subsequent exposing and undermining of the pipe.

f) At all above ground creek crossings, provisions shall be made to discourage pedestrian traffic on the pipeline, subject to District approval.

3. Design

a) Calculations shall be submitted, which clearly indicate the design of the pipe and supports regarding impact, horizontal and vertical forces, overturning, pier and anchorage reactions.

DRAFT

4. Permits

   a) The Developer and Contractor shall be in possession of all necessary state and/or federal regulatory agency permits prior to the construction of any creek crossing.

   b) Improvement plans that incorporate a creek crossing will not be approved for construction by the District until copies of the permits have been provided to the District.

3.13 Boring and Jacking Requirements:

A. Boring and Jacking operations shall be between the limits as shown on the plans as approved by the District and the other entities involved.

   1. The Consulting Engineer shall determine the minimum strength of the pipe, casing or conduit to be jacked in place and determine the vertical load and minimum thickness permitted.

   2. Any additional strength or thicker material shall be determined by the Consulting Engineer and approved by the District.

B. Unless otherwise approved by the District, steel casing shall be used in the jacking operation.

   1. The size (I.D.) shall be as shown on the plans and in no case shall the pipe wall thickness be less than 1/2”.

3.14 Crossing Culvert Pipe:

A. Sewer collectors and lower laterals shall have 12-inches vertical clearance minimum between any culvert unless ductile iron sewer pipe is used and approved by the governing agencies.

B. The Consulting Engineer shall check all culvert crossings with the appropriate governing agency to determine if future changes in culvert size or location are anticipated.

3.15 Access Roads:

A. All-weather access roads shall be constructed over all portions of every mainline sewer pipe, including manholes as required by this section.

B. Purpose

   1. Inaccessible sewer facilities are defined as all manholes, pipelines, building sewer connections, pumping facilities, and any other appurtenances used or useful in the collection and conveyance of wastewater that are located outside of publicly travelled rights-of-ways in unimproved areas, "back or side yard" easements and other locations as determined by the District.

DRAFT

C. Location

1. Unless otherwise approved by the District, access to inaccessible sewer facilities shall be provided by the Developer by constructing all-weather access roads along, across, over and to inaccessible sewer facilities so that all sewer facilities are accessible for District operation, maintenance, cleaning and repair.

D. Design

1. An all-weather access road shall consist of 8-inches of compacted aggregate base (95% relative compaction) topped with a minimum of 3-inches asphalt concrete.

2. AC surface shall be a minimum 12-feet in width on straight sections and on turns, shall conform to the turning dimensions depicted in Standard Drawing 13 of these specifications.

3. AC paved roads shall have a minimum 2-feet wide shoulder backing of properly compacted AB material, a minimum of 11-inches thick.

4. AC surface shall be constructed to drain away from manhole lids.

5. Other all-weather surfacing may be used in place of asphalt concrete with the approval of the District.

E. Conditions for Easement

1. Permanent easements will be required for all access roads and turnaround spaces as shown on the Standard Drawing Nos. 13, 14, and 15.

2. The hammerhead turnaround and right turn access road detail shall be reversed and used for left turn vehicular movements.

3. Unless otherwise approved by the District, hammerhead or intermediate turnaround spaces shall be constructed at the end of all access roads exceeding 120-feet in length and at intermediate locations as determined by the District.

4. Access roads 120-feet or less in length without a turnaround shall be with approval of the District.

5. Reference Section 6 for specific easement requirements.

F. Grade

1. The maximum access road grade shall not exceed 10 percent and shall be shown in the profile view.

2. The access road shall not block a natural or artificial drain and shall conform to the requirements of the governing agencies.

DRAFT

G. Controlled Use

1. District access roads shall not serve as joint use with driveways or for other private access purposes unless otherwise approved by the District.

2. Measures shall be taken to prevent unauthorized joint use and/or blocking of the access road.

3. The preventative measure taken shall be as approved by the District.

4. In certain cases, the creation of a separate parcel or lot to accommodate the access road may be required.

H. Security

1. All access roads shall have a gate or removable, lockable, flush mounted bollards per Standard Drawing 16 or 22 installed in locations approved by the District. Gates and bollards shall be secured with a District furnished lock. Other locks may be added in series to the District lock, but in no case shall the District be locked out or the District lock removed.

3.16 Grease Control Devices and Sand Oil Separators:

A. Definitions

1. The terms used in this section shall have the intent and meaning as defined in Chapter 3 – "Fats, Oils, and Grease" of the latest edition of the District Sewer Code.

B. Codes and Standards

a) Grease control devices (GCDs) shall comply with the latest edition of the following code(s)Uniform Plumbing Code (UPC)

2. GCDs shall comply with at least one of the following standards:

a) American Society of Mechanical Engineers (ASME) A112.14.3

b) CSA B481.1

c) Plumbing and Drainage Institute (PDI) Standard G 101

C. In all sewer lines leading from sinks, drains and other fixtures or equipment in the following types of establishments:

1. Food Service Establishments including, but not limited to restaurants, cafes, lunch counters, cafeterias, bars, clubs, coffee shops, specialty drink shops, ice cream parlors, delis, grocery stores, and bakeries,

2. Hotel, hospital, sanitarium, factory or school kitchens.

DRAFT

3. Other establishments where grease may be introduced into the sewage system in quantities that can affect line stoppage or hinder sewage treatment as determined by the District.

D. Accessibility

1. Grease control devices shall be installed at locations where it shall be readily accessible at all times for inspection, cleaning, and maintenance.

2. Grease control devices shall not be located in drive-thrus, parking stalls, and landscape areas, unless otherwise approved by the District.

E. Design

1. All drainage fixtures within food preparation areas shall drain through a grease control device.

2. Grease control devices shall be sized in accordance with the manufacture's recommendations and calculations.

   a) GGIs shall not be oversized to accommodate future development,

3. Sizing of hydromechanical grease interceptors shall conform to provisions of the Uniform Plumbing Code, latest edition and be sized based on a two-minute drainage period.

4. All grease control devices shall be properly vented according to manufacturer recommendations and building code requirements.

5. Depth of grease control device shall be taken into consideration during design to facilitate inspection, maintenance, and testing.

6. Maximum depth of grade rings shall not exceed thirty-six (36) inches.

7. Two-way cleanouts shall be installed upstream and downstream of the GCD at a maximum distance of five feet (5) unless otherwise approved by the District. See Section 7.08.A.3 of these specifications for the installation of two-way cleanouts.

8. Proposed grease control devices shall have efficiency documentation that specifies how efficient the device captures FOG at the design flowrate.

F. Location

1. Gravity grease interceptors (GGIs)

   a) GGIs shall be located outside of the building.

   b) GGIs shall be considered to be part of the building plumbing, therefore part of the private service line, subject to maintenance by the Developer or Owner and not by the District.

DRAFT

2. Hydromechanical grease interceptors (HGIs)

   a) HGIs shall be located outside of the building.

      1) HGIs may only be located inside the building if Placer County Department of Environmental Health's requirements are met and are approved by the District on a case-by-case basis.

      2) HGIs located inside the building shall meet all the requirements of the building department having jurisdictional authority.

3. Grease Removal Devices (GRDs) / Automatic Grease Removal Devices

   a) GRDs may only be located inside the building and are approved by the District on a case-by-case basis.

      1) GRDs may only be used with approval of the Placer County Department of Environmental Health.

      2) GRDs located inside the building shall meet all the requirements of the building department having jurisdictional authority.

G. Maintenance

1. GCDs shall be located in a manner that allows for required maintenance as described in Chapter 3 – "Fats, Oils, and Grease" of the latest edition of the District Sewer Code.

2. Gravity grease interceptors shall have three (3) access manholes, adjusted to grade, so that all compartments, piping, baffle walls, etc. shall be readily accessible for maintenance, inspection, cleaning and removal of intercepted grease, unless otherwise approved by the District.

3. GGIs shall have its entire contents pumped out at a minimum frequency of every 6 months or at a frequency as determined by the District.

H. <u>Inspection</u>

1. A sampling box shall be installed downstream of the grease control device to allow sampling of the effluent against the fats, oils, and grease (FOG) discharge limitation in Chapter 3 – "Fats, Oils, and Grease" of the latest edition of the District Sewer Code.

2. Gravity grease interceptors shall have three (3) access points so that all compartments, piping, baffle walls, etc. shall be readily accessible for maintenance, inspection, cleaning and removal of intercepted grease, unless otherwise approved by the District.

DRAFT

SECTION 4: WASTEWATER PUMP STATION

To the extent practicable, wastewater pump stations shall be avoided. In unavoidable cases, a pump station may be considered by the District after submission of a detailed engineering report documenting reasons for proposing a pump station. This report shall establish that there is no reasonable alternative other than a pump station to serve the proposed tributary area. This report will be reviewed by the District and a decision will be made by the General Manager. All wastewater pump stations shall comply with these Wastewater Pump Station Design Standards. Single parcel pump stations shall be owned and maintained privately by the parcel owner.

Calculations pertinent to the design shall be submitted to the District. Such calculations shall be used by the District for determining the adequacy and feasibility of the proposed facilities under review. Any failure on the part of the applicant or authorized representatives to submit such calculations may lead to delay in review and approval of the project.

No pumping facilities shall be incorporated into any sewer plans without prior District approval.

All design and construction shall be in accordance with these Wastewater Pump Station Specifications and every phase of the pump station and force main design shall be closely coordinated with and shall be under the direction of the District. Special provisions may be required by the District to supplement these Specifications and may specify in more detail the construction of sewer, wastewater pump station, and all appurtenances.

4.01 Design Factors to be Considered:

A. Type of Station (Built-In-Place Wastewater Pump Station):

1. All pump stations shall be built-in-place and may be either dry or wet well type.

B. Wastewater Flows and Design Capacity:

1. Wastewater flows:

a) Wastewater flows shall be determined in accordance with Section 3 of these Standards.

2. Design Capacity:

a) Wastewater pump stations shall be designed to discharge design flows.

C. Location:

1. Wastewater pump stations shall be located where tributary areas will be most effectively serviced and where development, construction, and operational costs would be at a minimum.

a) Pump stations should not be subject to flooding and shall be readily accessible.

DRAFT

2. Wastewater pump station sites shall be adequate in size to contain all facilities and to allow on-site parking of service trucks and equipment and to buffer adjoining properties from noise.

   a) Future modification and expansion requirements shall be given consideration.

3. The minimum distance from any building to the pumping station site shall be 100-feet or as required by the governing agency.

D. Site Dimensions:

1. The lift station parcel shall be a minimum of 15,000 square feet or as determined by the District.

2. The minimum width of the parcel shall be one hundred (100) feet or as determined by the District,

3. Maneuverability of the District's maintenance vehicles and onsite physical improvements shall be taken into consideration when determining the lift station geometry.

4.02 Plans of Wastewater Pump Stations:

A. General Layout:
General layout shall consist of the following at a minimum:

1. Plan view showing layout and dimensions of site and building(s), including driveway and number of parking stalls, exterior piping and appurtenances, fencing, and all utilities.

   a) Property ties shall also be shown.

   b) Building setbacks shall conform to the local jurisdictions' requirements, but in no case shall side and back yard setbacks be less than 15-feet.

2. Plans and details of grading, drainage, erosion control, landscaping, and sprinkler system.

3. Show FEMA flood elevations if area is in a 100-year flood plain.

4. Show hazardous area boundaries and classifications of spaces.

5. List utility company contacts.

6. Detail Plans:
   Detail plans shall consist of the following at a minimum:

   a) Architectural plans, elevations, and details.

   b) Structural plans elevations, sections, and details.

DRAFT

c) Utility plans (electrical, mechanical, etc.) showing exact location and size and type of all utilities, and elevation(s) to prevent damage from future excavations.

d) Mechanical plans including pump, isometrics, plumbing, ventilation, air condition and other equipment installations, piping layout, and details.

e) Electrical and telemetry plans and details, including conduit schedule and lighting fixture layouts, control equipment arrangement, and wiring diagrams (one line and elementary control diagrams) for power distribution and controls.

f) In accordance with Cal-OSHA, an electrical engineer shall determine if an Arc Flash Survey is required and provide a Survey Report and recommendations if necessary or provide letter certifying otherwise.

g) Wastewater level control arrangement for operating pumps and alarms.

h) Other plans, sections, elevations, schematics, details and notes, as required, to adequately show the proposed construction.

4.03 Site Improvements:

A. Grading:

1. Wastewater pump stations shall be located two feet (2') above 100-Year Flood Level and provided with adequate drainage facilities to carry away storm waters.

2. Adjacent properties shall not be jeopardized by such provisions.

B. Driveways and Parking Areas:
Paved driveways and parking areas shall be provided for service trucks.

1. Width of driveways shall be 12**-feet** minimum.

2. Pavement shall be asphalt or Portland cement concrete.

3. Concrete curbs shall be required for all pump stations.

4. Entrance gates shall be set inward, toward the station, at least 18-feet to provide safety for trucks entering or leaving the station.

5. Shared residential driveways or any access routes that may become restricted or blocked are unacceptable.

C. Fencing

1. Pump station sites shall be enclosed with a six foot (6') high perimeter fence or wall.

a) Masonry walls or other approved types of enclosures are required if pump station is located adjacent to a residential project.

DRAFT

2. Where chain link fences are used, wire fabric shall be nine gauge minimum.

   a) In corrosive areas, corrosion protection or additional thickness shall be provided.

   b) In isolated areas or at other areas as directed by the District, three strands of barbed wire should be installed along the top of the fence on an arm projecting outward at an angle of 45 degrees.

3. Gates shall, at minimum, be 12-feet wide for vehicle gates and 3-feet wide for pedestrian gates and shall be provided with heavy duty padlock hasp fixtures and shall be designed for safe opening and closing during strong winds.

   a) At facilities where PG&E transformers and/or meters are installed within the station's perimeter, hasps shall be provided to accommodate two padlocks.

   b) Design shall allow access with either padlock removed.

4. A one foot (1') wide gravel strip shall be provided under fencing. Gravel strip shall be contained with redwood or other approved durable material headers and shall have an approved fabric weed barrier installed prior to placement of gravel.

5. Clear redwood slats or other material acceptable to the District, with a length equal to the designated fence height shall be inserted vertically in the mesh openings, so as to fit snugly, and fastened in a manner to prevent easy removal or displacement.

D. Landscaping:

1. Sites shall be landscaped to blend with the surrounding environment to render a pleasing overall appearance. Consideration shall be made to minimize grounds-keeping maintenance.

   a) Chain link fencing shall be screened with landscaping.

   b) For grounds landscaping, crushed rock such as coral chips, red cinder stone or blue stone shall be used.

      1) Approved fabric weed barrier shall be placed prior to placement of rock.

E. Sprinkler System:

1. Automatic irrigation systems shall be installed for irrigation as necessary for site conditions.

F. Signage:

1. Informational signage shall be provided and installed as required by state or local law and as required by the District.

DRAFT

4.04 Structure and Appurtenances:

A. Architectural Design:

1. Wastewater pump stations shall be architecturally designed to be in harmony with surrounding development.

2. Materials shall be selected to keep construction and maintenance cost at a practical level.

3. As much as possible, non-corrosive materials shall be used.

4. All architectural design shall be prepared by a Registered Architect.

B. Substructure

1. Built-in-place pump station substructures shall be reinforced concrete construction.

   a) All substructures shall be waterproof and watertight.

   b) Test borings shall be made to determine the soil characteristics and ground water conditions at all pump station sites and foundations shall be suitably designed.

   c) Consideration shall be given to flotation during construction and/or flooding condition.

   d) Ensure that NPSH requirements of pump are met.

2. Structural backfill for the lift station shall be placed as engineered fill, in lifts not exceeding 12-inches in compacted thickness.

   a) Each layer being of uniform moisture conditioned to at least the optimum moisture condition and compacted to at least 90% of the maximum dry density per ASTM D1557-91 specifications.

   b) Where backfill will support pavements the upper 12-inches of backfill and base material shall be compacted to at least 95% relative compaction.

3. Backfill around the lift station well shall consist of clean crushed rock with 100% passing through a one-inch (1”) sieve and appreciable amount passing through a #4 sieve.

   a) A minimum of 12-inches (12”) of crushed rock shall be placed at the base of the sewer lift station footing for stabilization and extending a minimum of 12-inches (12”) outside the edge of cast-in- place or pre-cast base.

   b) In all areas the crushed rock shall be separated from the native material with an approved non-woven geo-textile fabric.

DRAFT

4. With approval of the District, excavated soils may be used for backfill, after required drying has occurred to allow the specified degree of compaction to be achieved.

   a) Imported soils must be free of organic concentrations, rubble or debris and must have approval of the District.

5. The contractor may find it necessary to use deep wells to lower the water table in lieu of using sump construction and pumping.

   a) If sheet piling is used the contractor shall extend the tips to a sufficient depth to prevent “quick” conditions or sand “boils” from occurring.

   b) The excavation for the sewer lift station may require the contractor to use special construction techniques, which may include but not limited to, sloped excavation, shoring and/or sheet piling, or a combination of methods.

   c) The contractor shall submit to the District for review and approval all shop drawings and proposed methods of construction.

6. Dry Wells:

   a) Dry wells shall be sized to meet space requirements for equipment, piping and ease of maintenance.

   b) Adequate working space, at least two feet (2’) clear, shall be provided between and around pumps and other equipment.

   c) Provide three feet (3’) clearance for electrical equipment to comply with the National Electrical Code or local governing authority.

   d) Space and provisions for planned future pumps and equipment shall also be provided.

7. Wet Wells:

   a) Wet wells shall be designed on the basis of minimizing deposits of solids, preventing wastewater from becoming septic, optimizing pump runtime and avoiding frequent starting of pumps.

   b) Minimum pump cycle (period from start to stop) for any one pump shall be 5 minutes.

   c) Maximum retention time of wastewater in wet wells shall be 60 minutes at average flow (total wet well wastewater volume shall be used in computing retention time).

   d) Wet wells shall have a minimum inside width of five feet (5’) and shall be sized to keep wastewater levels within the following limits:

DRAFT

1) High water level

(a) Desired: invert of incoming sewer

(b) Maximum: crown of incoming sewer

2) Low water level

(a) Not lower than top of pump casing.

3) Vertical distance between pump start and stop levels

(a) Six inches (6”) minimum

e) Floors shall have a slope of 1:1 minimum, sloping towards a hopper bottom. The hopper bottom shall be designed for proper installation and function of pump suction inlets.

f) Influent lines shall be designed without vertical drops into the wet well to minimize release of entrained air/gases.

g) The wet well shall be divided into two or more sections, properly interconnected, to facilitate repairs and cleaning.

h) Wet wells shall have a lining to protect against hydrogen sulfide corrosion in accordance with Section 2.11 of these specifications.

i) Mark calibration lines on the wet well wall for visual confirmation of level during start-up.

8. Access:

a) Reinforced concrete or structural steel stairways shall be provided for access to dry wells.

b) Stairways shall have a clear passage of at least 30-inches. Stairs shall be provided with permanent non-slip treading.

c) Access shall be provided to all wet well compartments by means of manholes and 316 stainless steel or other approved ladder rungs.

d) Access manholes shall be located to best facilitate maintenance operations.

e) Manhole castings shall conform to Section 2.12 of these standards. For instances when hatch covers are called for, hatch shall, at a minimum, conform to the following:

1) Material shall be aluminum, minimum $^{1}/_{4}$” thick

2) Designed to receive H-20 wheel loads

DRAFT

3) Stainless Steel (S.S.), watertight Slamlock with S.S. Key and Plug

4) S.S. Automatic Hold Open Arm

5) S.S. Compression Springs for Lift Assist, or other mechanism approved by the District

6) S.S. Hinges with Tamper-Proof Bolts

7) Flush Cast Aluminum Drop Handle (recessed)

9. Ventilation:

a) Dry well shall be ventilated by a mechanical air exhaust system providing at least one air change every three (3) minutes.

b) Outlets of exhaust system should not be located less than 12-feet from any opening except when exhausting through the roof.

1) Ventilation exhaust shall be located downwind of any inlet openings.

2) Velocity in air ducts shall not exceed 1500 fpm.

3) When required fan capacity is large, the use of two fans shall be considered.

4) Switches for the operation of the ventilation equipment shall be interlocked with the dry well light switch.

5) Ventilation shafts shall be provided for wet well compartments with only one access opening.

10. Drainage:

a) Dry well floors shall be constructed to drain by gravity into trench drains channeled to a sump.

b) The sump pump shall be submersible.

c) Minimum sump pump capacity shall be 25 gpm with exception of stations equipped with water seal systems, hydraulic operated check valves, or similar type equipment.

1) These stations shall be provided with duplex submersible pumps, each capable of pumping at least 50 gpm.

d) A switch for lead/lag operations shall be provided at the MCC.

e) Sump pump discharge shall enter the wet well adjacent to and as high as possible to the ground floor level.

DRAFT

f) Trench drains shall be covered with corrosion resistant gratings.

g) Floor framing and anchoring devices for gratings shall be 316L stainless steel.

C. Superstructure:

1. All pump stations shall have a superstructure.

a) Floor Elevation and Area:

1) The latest flood zone map shall be consulted. Floor areas shall be adequate for mechanical equipment, electrical equipment and controls, sanitary facilities, storage, and future expansion.

2) Additional buildings or rooms may be required by the District.

3) Adequate working space, at least three feet (3') clear, shall be provided between and around all equipment.

4) Provide a minimum of three feet (3') clearance for electrical equipment, or as required by the National Electrical Code.

b) Height:

1) Height of superstructure shall provide adequate working height to accommodate maintenance personal.

2) In addition, height of superstructure shall be adequate to permit the removal of all equipment and facilities contained within and to accommodate hoisting equipment.

c) Materials of Construction:

1) The following materials are acceptable for construction of superstructures:

(a) Beams and Columns: Reinforced concrete or structural steel.

(b) Roof: Wood truss and plywood.

(c) Wall: Masonry or reinforced concrete.

d) Insect Screens:

1) All structure openings for ventilation or light, except doorways, shall be equipped with removable stainless steel insect screens.

e) Doors:

1) Doors shall be of adequate size to permit removal of pumps, motors, and other equipment.

DRAFT

2) Locks shall be keyed to match the District master key.

f) Roofing:

1) Unless otherwise submitted and approved, roofing shall be pitched, standing seam metal.

g) Railings and Stairways:

1) Railings and stairways shall conform to OSHA regulations and local governing authority Building Codes.

h) Outdoor Enclosures:

1) Gauges, meters, and control devices installed outdoors shall be mounted within NEMA-4 enclosures.

2) Gauges integral of other devices such as bearing thermometer on motors will be considered exceptions.

3) PG&E facilities location shall be as approved by PG&E.

D. Provision for Equipment Removal:

Provisions shall be made to facilitate removing pumps and other equipment for repair and maintenance.

1. Openings:

a) Openings shall be provided in ground and intermediate level floors of pump stations.

b) Ground level floor openings shall be covered with removable grates and have removable pipe posts and guard chains around its periphery.

c) Stationary posts with removable pipe railing sections shall be provided around intermediate floor openings.

d) Manhole openings shall be provided with portable peripheral curbing and shall be large enough to provide ample room to install or remove pumps and other equipment.

2. Hoists:

a) Built-in-place pump stations shall be equipped with trolley type hoists traveling on steel beams.

b) Hoists for station shall be electrically powered.

DRAFT

c) Plug-in type hoists operating on single phase 120 volts may be allowed for small stations.

d) Hoists shall be designed for the application intended at ultimate build-out.

3. Eye Bolts:

a) Eye bolts for block and tackle type hoist shall be provided over pumps, valves, header piping, and other locations to facilitate maintenance operations and equipment removal.

b) The load rating of each eyebolt shall be shown on the plans.

4. Headroom:

a) Sufficient headroom, including room for lifting device, shall be provided to allow pump rotating element to be removed without disturbing the pump volute.

E. Station Facilities:

Depending on proximity of station to other available District facilities, and on a case-by-case basis, built-in-place pump stations may be required by the District to incorporate any or all of the following:

a) Sanitary Fixtures and Accessories:

1) Service sink shall be acid resistant, white enameled, cast iron body, stainless steel rim.

2) Water closet shall be vitreous china, wall hung, close-coupled closet combination with open front, back closet seat without cover.

3) Paper towel dispenser shall be chromium plated.

4) Toilet paper holder shall be chromium plated.

5) Paper toilet seat cover dispenser shall be chromium plated.

6) Soap dish shall be chromium plated.

7) Wastepaper basket shall be plastic or non-corrosive material.

8) Wall mirror shall be a minimum 12 in. x 24 in.

9) Small storage cabinet for janitorial supplies shall be a minimum 24 in. wide, 24 in. high and 12 in. deep.

b) Light Fixtures and Receptacles:

1) Light Fixtures:

DRAFT

(a) Light fixtures shall be provided to supply adequate illumination within pump stations and shall be mounted where re-lamping can be accomplished with reasonable ease as determined by the District.

(b) Light fixtures shall also be installed next to exterior doors on the outside and around the perimeter of the building with at least one light to illuminate the wet well as directed by the District.

(c) Wet wells shall not require light fixtures. Light fixtures below ground level shall be vapor tight.

(d) Fluorescent fixtures using 48-inch T-8 type tubes are preferred.

(e) High pressure sodium fixtures shall be used where required by the District.

(f) Light fixtures shall be 120 Volt.

2) Night Lights:

(a) Night lights shall be provided above all building entrances and equipped with lamp shades to prevent glare beyond the perimeter fence line.

(b) Provisions shall be made for a night light at the perimeter entrance gate as may be required by the District.

(c) Night lights shall be automatically controlled by photocells.

3) Emergency Lights:

(a) Battery-powered emergency lights shall be provided at all floor levels of the pump station and emergency generator location or building.

(b) Emergency lights shall be connected to the normal service via a receptacle, mounted adjacent to the emergency light.

4) Receptacles:

(a) Weather-proof GFCI receptacles shall be installed at all floor levels of pump station and outside the building, adjacent to the wet-well and at other locations as required by the District.

5) Electrical Code:

(a) Electrical system shall conform to the National Electric Code, and the Building Code of the local governing authority.

DRAFT

c) Telephone:

1) Terminal cabinet, telephone jacks, CAT5 cabling, and touch tone handset shall be provided.

2) Provide an AC duplex receptacle.

d) Miscellaneous Equipment:

1) The following may be required:

(a) Fire Extinguishers: Fifteen lbs., C02 for MCC room and generator area; Ten lbs. dry chemical for lower floors.

(1) All fire extinguishers shall be wall mounted and properly labeled.

(b) First aid kit, wall mounted

(c) Eight-inch electric clock, wall mounted

(d) Plastic trash receptacle, thirty gallons capacity with cover

(e) Desk and chair.

(f) Storage cabinet for flammable materials, 36” H x 24” W x 12” D

(g) Legal size, 4 drawer file cabinet with lock

(h) Storage cabinet and/or racks for spare parts, 72” H x 32” W x 12” D

(i) Workbench 30” H x 60” W x 24” D

4.05 Pumps, Motors and Controls:

A. Sewage Pumps and Motors:

1. General:

a) Major pump stations shall be equipped with a minimum of three pumps.

1) Smaller pump stations may be equipped with two pumps.

2) Pumps shall be capable of operating over the range of flows without excessive cycling and without long retention time.

b) Variable speed drives shall be utilized for wastewater pump stations and whenever conditions such as long retention periods or short pumping cycles cannot be avoided.

1) Dual speed motors may be considered where appropriate.

DRAFT

c) All pump stations shall be equipped with a standby pump equal in capacity to the largest of the main pumping units.

1) The main pumping units shall be capable of handling the station's design flow without the use of the standby unit.

d) Pumps shall be capable of passing spheres of at least two inches (2") and shall have a minimum discharge opening of four inches (4") in diameter.

1) Speed of pumps shall not exceed 1750 rpm unless approved by the District.

e) Pumps shall be capable of safely rotating in reverse direction at full runaway speed without damage to appurtenances under the shutoff head of the units.

1) The brake horsepower required at full motor speed at any head along the curve shall not exceed the rated horsepower of the motors.

f) Pumps shall be intrinsically safe and in accordance with Cal-OSHA, NEMA and IEEE requirements.

2. System Head-Capacity Curves:

a) Pumps shall be selected so that the head-capacity characteristics correspond as nearly as possible to the overall station requirements.

b) This shall be accomplished by the preparation of the system head-capacity curves showing all conditions of head and capacity under which the pumps will be required to operate.

c) The system head-capacity curves shall be developed using standard hydraulic methods for determining friction losses to show the minimum and maximum head losses that can be expected.

d) The equivalent length method using the Hazen-Williams formula is preferred.

e) Minimum and maximum head losses shall be determined using "C" values.

f) The system head-capacity curves shall consist of the following:

1) System Curves.

(a) Curves showing total dynamic losses in the force main at varying pumping rates for minimum and maximum static heads.

(b) Individual Pump Characteristic Curves.

(1) Curves furnished by pump manufacturer showing pump's head-capacity characteristics.

DRAFT

(2) Curves at minimum and maximum anticipated speeds shall be furnished for variable speed pumps.

(c) Modified Pump Curves:

(1) Curves showing pumps head-capacity characteristics at the station header, obtained by deducting friction losses in the suction and discharge piping of each individual pump from their characteristic curves at corresponding pumping rates.

(d) Combined Modified Curves:

(1) Curves showing multiple pump operation, obtained by adding capacities at points of equal heads on the modified pump curves.

(e) NPSH Curves:

(1) Curves showing the available system net positive suction head (NPSHA) and the pump's required net positive suction head (NPSHR) shall also be evaluated to minimize the occurrence of cavitation.

(2) The NPSHA and NPSHR curves shall include the operating conditions of minimum static suction head and maximum frictional loss over the entire operating range of each pump.

(3) For variable speed pumps where operation of a single pump at the maximum speed will result in cavitation, NPSHA and NPSHR curves shall also be evaluated at the highest variable speed that the pump will experience when it is operated alone or when operated simultaneously with other pumps.

3. Types of Pumps/Pump Construction:

a) All pumps shall be vertical units.

1) Motors for stations with pump capacities greater than 2 MGD shall be installed on the ground level floor and connected to pumps with removable drive shafts, intermediate drive shafts, and equipped with removable and adjustable flexible couplings.

(a) For pumps of less than 2 MGD capacity, submersible pumps may be used for wet pit installation.

(b) Consideration for pump on/off cycling shall be made to avoid high motor temperature.

(c) Motors for stations with pump capacities less than 2 MGD may be pedestal mounted.

DRAFT

b) Dry Pit Pump

1) Hand-holes shall be provided on the periphery of pump casings and suction elbows for purposes of inspection and removal of obstructions.

(a) Hand-hole covers shall be flanged and secured to bossed sections and shall have interior surfaces formed to match interior surfaces of casting to which attached.

(b) Pump casing hand-hole shall be located so that visual inspection can be made of the discharge end as well as the volute.

(c) Hand-holes shall be a minimum of four inches (4”) or about half of the pump size.

2) Pumps shall have flanged suction and discharge nozzles, faced and drilled to conform to ANSI Class 125 lb. standard.

(a) Pumps of sizes greater than five inches (5”) shall be furnished with suction elbows that are separate and not integrally cast with any other part of the pump.

(b) Suction elbows shall be designed to prevent cavitation.

(c) Guide vanes shall not be used in suction nozzles.

3) Pumps of sizes greater than five inches (5”) shall be provided with either fabricated structural steel supports or cast iron ribbed supports.

(a) Cast iron supports shall be cast integral with the pump casing or suction nozzle.

4) Base or sole plates shall be provided.

(a) Plates shall be anchored by stainless steel bolts with stainless steel lock washers and grouted to reinforced concrete pedestals.

(b) Hardened steel jacking screws for leveling and for aligning of pumps shall be provided.

(c) Mating surfaces shall be machined, and all holes drilled and not be burned.

5) Intermediate drive shaft sections should be not more than 12-feet in length.

(a) Where more than one drive shaft is required, self-aligning steady bearings shall be provided at each intermediate location.

(b) Bearings shall be equipped with mechanism to allow alignment adjustments.

DRAFT

(c) Bearing and shaft guards shall be provided. Safe access to bearing and guards shall be provided.

(d) Grease fittings shall be equipped with extension tubing to facilitate lubrication.

6) Drain and air release lines shall be provided for all pumps.

(a) Drain lines shall be installed at the packing drip reservoir and at the centerline of the suction pipe.

(b) Air release line shall be installed at high point of pump casings.

(c) Connecting points shall be bossed, drilled, and tapped.

(d) Minimum size shall be one (1) inch. Air release lines from pump to the first valve shall be brass.

(e) Provisions shall be made for a sampling tap for wastewater unless waived by District.

7) Other features of pumps shall be as follows:

(a) Bearing Housing: Of single cast piece or fabricated structural steel.

(b) Bearings: Not less than two.

(c) Shaft Sleeve: Replaceable stainless steel sleeve, from the outside end of the seal gland to the impeller and set screwed to the drive shaft.

(d) Sealing Gland: Double mechanical seal with suitable fluid sealing/lubrication system.

(e) Casing and Impeller Wearing Rings: Stainless steel and “Z” or “L” shaped.

(f) Suction Plate: Separate from suction elbow (pumps five inches (5”) and smaller may be accepted).

(g) Taper Pins and Jacking Screws: On all machined joints and hand-holes.

(h) Eyebolts or Other Provisions for Lifting: On volute and bearing housing.

(i) Impeller Locknut: With smooth surface, no sharp corners and edges, and easily replaceable.

(j) Seals: On both the upper and lower sections of the bearing housing.

(k) Tapered Shaft: Tapered for the full length of fit and keyed to the impeller. Exception may be made for four-inch pumps.

DRAFT

c) Wet Well Submersible Pump:

1) Hand-holes shall be provided on the periphery of pump casings and suction elbows for purposes of inspection and removal of obstructions.

(a) Hand-hole covers shall be flanged and secured to bossed sections and shall have interior surfaces formed to match interior surfaces of casting to which attached.

(b) Pump casing hand-hole shall be located so that visual inspection can be made of the discharge end as well as the volute.

(c) Hand-holes shall be a minimum of four inches (4”) or about half of the pump size.

2) Pumps shall have flanged suction and discharge nozzles, faced and drilled to conform to ANSI Class 125 lb. standard.

(a) Pumps of sizes greater than five inches (5”) shall be furnished with suction elbows that are separate and not integrally cast with any other part of the pump.

(b) Suction elbows shall be designed to prevent cavitation.

(c) Guide vanes shall not be used in suction nozzles.

3) Base sole plates shall be provided.

(a) Plates shall be anchored by stainless steel bolts with stainless steel lock washers and grouted to reinforced concrete pedestals.

(b) Hardened steel jacking screws for leveling and for aligning of pumps shall be provided.

(c) Mating surfaces shall be machined, and all holes shall be drilled and shall not be burned.

4) Drain and air release lines shall be provided for all pumps.

(a) Drain lines shall be installed at the centerline of the suction pipe.

(b) Air release line shall be installed at high point of pump casings.

(c) Connecting points shall be bossed, drilled, and tapped.

(d) Minimum size shall be one (1) inch.

(e) Air release lines from pump to the first valve shall be brass.

DRAFT

(f) Provisions shall be made for a sampling tap for wastewater unless waived by the District.

5) Other features of pumps shall be as follows (all shall be non-corrosive):

(a) Pump shaft shall be stainless steel.

(b) Bearings: Not less than two, sealed, and grease lubricated.

(c) Seal:

(1) Tandem, double mechanical seal running in an oil reservoir.

(2) It shall be composed of two separate lapped-face seals, each consisting of one stationary and one rotating tungsten- carbide ring; with each pair held in contact by a separate spring.

(3) The compression spring shall be protected against exposure to the pump liquid.

(d) Casing and Impeller Wearing Rings: Stainless steel and “Z” or “I” shaped.

(e) Suction plate: Separate from suction elbow (pumps five inches (5”) and smaller may be accepted).

(f) Taper Pins and Jacking Screws: On all machined joints and hand-holes.

(g) Eyebolts or Other Provisions for Lifting: On volute and bearing housing.

(h) Impeller Locknut: With smooth surface, no sharp corners and edges, and easily removable and replaceable.

(i) Tapered Shaft: Tapered for the full length of fit and keyed to the impeller. Exception may be made for four-inch (4“) pumps.

d) Provide pump and motor sensors and alarms for:

1) High temperature

2) Vibration (non-submersible only)

3) Seal leakage (submersible only)

4. Motor Construction

a) Dry Pit Motor:

1) Motors shall conform to the latest standards of the NEMA and the IEEE. Motors shall have ample capacity to operate the pumps under all head and discharge conditions without overloading. Starting current taken by the

DRAFT

motors shall not exceed the values as regulated by PG&E or as permitted by the emergency generator.

(a) Motors shall be capable of safely rotating in the reverse direction at runaway speed without damage to appurtenances under shutoff head.

(b) Motors shall operate pumps through flexible shafts and couplings.

(c) Vertical shaft motors mounted on floors shall be furnished with rugged cast iron or steel foundation rings.

(d) Motors shall be induction type, drip proof and suitable for operation from 230/460 volts, 3 phase, 60 cycle A.C. power systems.

(e) Motors shall have a service factor of 1.15.

(f) All pump motors shall have running time meters installed at the starter.

(g) All pump motors shall have an ammeter installed at the starter.

(h) Dry pit sump pump motor shall have running time meters installed at the starter.

2) Motors shall be grease lubricated.

(a) Motors 7 HP or larger shall be provided with thermostatically-controlled space heaters.

(b) Variable speed motors shall be provided with a RPM measuring device with a 4 to 20 milliamp output and a panel mounted digital RPM indicator.

b) Submersible Motor:

1) Motors shall conform to the latest standards of the UL or FM approved for Class 1, Division 1, Groups C and D.

(a) Motors shall have ample capacity to operate the pumps under all head and discharge conditions without overloading.

(b) Starting current taken by the motors shall not exceed the values as regulated by PG&E or as permitted by the emergency generator.

(c) Motors shall be capable of safely rotating in the reverse direction at runaway speed without damage to appurtenances under shutoff head.

(d) Motors shall be suitable for operation from 230 or 460 volts, 3 phase, 60 cycle A.C. power systems.

(e) Motors shall have a service factor of 1.15.

DRAFT

(f) Motors shall be 1800 rpm or less.

(g) All pump motors shall have running time meters installed at the starter.

(h) All pump motors shall have an ammeter installed at the starter.

(i) The motor power wiring shall be brought up into an intermediate termination box.

(j) The seal-off fitting shall not be in the conduit with pump cable fill.

2) Pump motors shall be housed in a watertight casing and shall have moisture resistant insulated windings.

(a) Pump motors shall have cooling characteristics suitable to permit continuous operation in a non-submerged condition.

3) Provide pump motor monitoring relays if available.

5. Indicating Pressure Gauges:

a) Indicating pressure gauges shall be provided at discharge nozzle and suction plate of pumps.

b) Indication shall be in feet. Isolation valves and stainless steel diaphragm seals or inline ring seals shall be provided at gauges.

6. Testing:

a) All wastewater pumps shall be factory tested in accordance with the ASME Power Test Codes or the Standards of the Hydraulic Institute.

b) Five (5) certified copies of the pump curves and data shall be furnished with each pump requiring drive motors 40 HP or smaller.

c) For pumps requiring drive motors greater than 40 HP, a witness shop test shall be required, and five (5) certified copies of the pump curves, data and report shall be furnished with each pump.

d) Each pump casing shall be tested under a hydrostatic pressure of not less than 60 psi.

e) All impellers, including spares, shall be statically and dynamically balanced.

f) All electric motors shall be tested by the motor manufacturer.

g) Routine tests are required for motors rated at 40 HP or less and Witnessed Complete Tests shall be required for motors larger than 40 HP.

DRAFT

h) Five (5) copies of the certified or witnessed test data shall be furnished for each motor.

i) All pump operations shall be field tested to demonstrate satisfactory operation.

7. Spare Parts:

a) Minimum spare parts:

b) All installations shall be furnished with the following:

1) For each pump:

(a) One set renewable sleeve for the pump shaft.

(b) One set of gaskets for all pump casing joints.

(c) One set of wearing rings, complete, for both pump casing and impeller.

(d) All parts recommended in the manufacturer's O&M manual.

2) In addition to the above, provide for each different size pump:

(a) One complete pump, including suction plate.

(b) One set of each type of bearing used in the pump and shafting.

(c) One packing gland complete with rings, nuts, bolts, and one box of coil packing (if applicable)

3) For submersible pump:

(a) One mechanical seal assembly (if applicable).

(b) One complete pump unit with stand.

4) For motor:

(a) One set of bearings, complete for each size of motor 30 HP or larger.

(b) One set of space heaters for each size of motor.

(c) One set of brushes for each wound rotor motor.

(d) One brush holder assembly (for each size of wound rotor motor).

5) For generator:

(a) All parts recommended in the manufacturer's O&M manual.

(b) One circuit board for the voltage regulator.

DRAFT

6) For ventilation fan:

(a) One set of fan drive belts.

B. Starters and controls:

1. Liquid Level Controls:

a) The operation of wastewater pump motors shall be automatically controlled by liquid level sensing devices, actuated by wastewater level fluctuations in the wet well.

b) Ultra Sonic/Transducer type with a 4-20 MA output should be provided.

c) Automatic control settings shall be manually adjustable.

d) See “Instrumentation” for acceptable ultrasonic level transmitter manufacture.

1) Duplicate control units shall be provided for all pump stations equipped with split wet-well chambers.

(a) Controlling devices should also be capable of alternating the lead pump and setting off high and low level alarm.

(b) The operating range of controlling devices shall conform to the requirements of minimum pump cycle and maximum detention time.

2) A spare controller, identical to the installed controllers, shall be provided to the District.

3) Provide high and low level float level switches (Flygt or equal) for back-up (redundant) control.

(a) Provide intrinsically safe relays (Gem or equal).

(b) Provide a stainless steel float switch bracket.

2. Selector Switches:

a) HAND-OFF-AUTO selector switches shall be provided to operate pumps.

b) Selector switches shall be located at the motor control panel and watertight switches next to pumps (non-submersible only).

c) Automatic and manual control for variable speed pumps shall be capable of being adjusted over the effective speed range.

DRAFT

3. Starters:

   a) Unless otherwise restricted by PG&E, starters shall be of the combination, magnetic, across-the-line (full size) NEMA rated (size 1 minimum) type. Starters shall be solid-state.

   b) A spare starter, identical to the installed starter, shall be provided to the District.

4. Motor Control Panels:

   a) Starters shall be mounted and wired as an integral part of free standing, unitized, enclosed control centers.

      1) Control panels shall be designed and constructed in accordance with the latest standards of the NEMA and the IEEE.

      2) Motor control panels shall be installed to permit full opening of doors without interference from adjoining cabinets, walls or other equipment.

      3) Split hinge doors may be used to prevent opening interference.

   b) All major components of motor control panels shall be by one manufacturer.

      1) If more than one control panel is to be installed it shall be of the same type and manufacturer who has a qualified electrical service engineer permanently assigned and residing in Northern California.

      2) All panel units, devices, indicating lights, and instrumentation shall be identified by engraved nameplates or metal collars.

      3) All starters shall be of the draw out type whereby all control wiring and power conductors are automatically disconnected upon removal of the starter.

5. Indicating Lights and Elapsed Time Meters:

   a) Appropriate indicating lights and elapsed time meters shall be installed for each starter.

   b) The running time meters shall be non-resetting, digital display, including a one-tenth hour feature.

   c) Indicating lights should be of the push-to-test type or light emitting diode (LED).

C. <u>Miscellaneous Electrical Equipment</u>:

1. Conduit shall be plastic coated rigid steel.

2. Conductors shall be THWN or XHHW.

DRAFT

3. Seal-off fittings and termination boxes shall be provided.

4. Enclosures shall be rated NEMA 1 or 12 where mounted indoors, NEMA 4X (Stainless Steel) where mounted outdoors.

5. All equipment shall be labeled.

D. Instrumentation, PLC, OIT and SCADA System:

1. SCADA software modifications Instrumentation, Operator Interface Terminals and Programmable Logic Controllers, when required by the District, shall conform to equipment as currently used by the District including Data Flow Systems TCU001 Telemetry Control Unit Pump Controllers, Data Flow Systems OCS RIO032 I/O Cards, Data Flow Systems TACII RTU Systems and Data Flow Systems HyperTACII Software.

   a) All PLC or Pump Controller and SCADA interface control parameters and alarms shall contain adjustable setpoints, deadbands and timers, as applicable, and be easily modifiable.

   b) All inputs, outputs, setpoints, timers and other control and monitoring parameters shall be viewable and modifiable at the central computer and locally by the OIT.

   c) Implement a 20 character PLC tag system.

   d) Provide five characters for facility location and area identification, ten characters for ISA (5.1)/Agency instrumentation tag description, two characters for the type of point and three characters for the point function description).

2. Instrumentation:

Pump stations shall be provided with instrumentation, pump controller or PLC and SCADA systems which include the following:

   a) Telemeter:

      1) Discharge flow

      2) Discharge pressure

      3) Wet well level

      4) Run-time pump hours

   b) Run report-back of operational status:

      1) Sewage pumps

      2) Sump pumps

DRAFT

3) Emergency generator

4) VFD speeds

5) Other items of importance to operations

c) Alarms:

1) Normal power source failure (i.e. low voltage, high and low frequency, or phase reversal)

2) Alternate power source failure

3) Generator operating

4) Low level in wet well

5) High level in wet well

6) Pump Fail (for each pump)

7) High level in pump room sump

8) Other equipment failures which, in the opinion of the District, could endanger pump station operations

9) Diesel Engine Supervision (i.e., starter failure, low speed, low oil pressure, high water temperature, low fuel level (25% capacity etc)

10) Building/Site intrusion or security panel trouble

11) Smoke detector (one for each room) or fire alarm panel

12) Emergency Storage High Level

13) VFD Fault

3. Remote Controls:
When conditions dictate that installations be remotely controlled from supervisory stations, the following additional functions shall be provided:

a) Report-back:

1) Operational status of each pump (running or not running)

2) Operational status of any other item of importance to remote control operations

b) Supervisory remote controls:

1) Start and stop pumps

DRAFT

2) Other functions of importance to remote control operations

c) Alarms:

1) Warning of transfer to supervisory remote control operations

2) Other alarms of importance to remote control operations

4. Relay to District:

a) All readings, alarms, and indications shall be relayed to supervisory stations designated by the District.

b) If a SCADA system is not being utilized, as determined by the District, an auto-dialer (RACO Verbatim - 8 Channel) shall be installed to provide for alarm relays.

5. Suppliers:

a) Instrumentation systems should be provided by one integrator with field and shop maintenance facilities and full-time service engineers located in the Sacramento area.

6. Flow Meters:

a) Flow meter instruments at the pump station shall be capable of totalizing, indicating, and recording flows.

b) Record flows locally.

c) All sensors for temperature, pressure, flow, and all other dynamic measurement outputs must have 4-20 mA outputs.

1) Provide dry contact flow totalization output.

d) Components mounted below grade shall be rated for submergence (NEMA 6P).

e) Flowmeters shall be intrinsically safe.

f) The Mag Flowmeter, carbon steel, flanged, shall be as manufactured by Siemens Magflo 3100 and 5100 with Mag 6000 Transmitter and SENSORPROM to store calibration data, the programming and setup data entered during commissioning.

7. Level Meters:

a) Wet well level meter receiving instruments at the pump station shall be capable of indicating and recording wet well levels.

DRAFT

1) Ultra Sonic/Transducer type with a 4-20 MA output should be provided.

2) Miltronics HydroRanger 200 Plus with appropriate depth sensor.

3) Level sensors shall be intrinsically safe.

b) Record level locally.

c) Indicator shall be four inches (4”) long or shall be digital with approximately one inch high numerals.

d) Fuel level (inventory) meter shall be installed in the generator room for diesel fuel tank systems.

1) The fuel level transmitter shall be Flowline with compact junction box or approved equal.

8. Pressure Meters:

a) Force main pressure meter receiving instruments at the pump station shall be capable of indicating and recording pressure.

b) Record Discharge pressure locally.

c) Pressure transmitters shall be suitable for Class 1, Division 1 systems.

d) Pressure transmitter with display shall be a Siemens Sitrans P300.

9. Electronic Recorder:

a) Recorder shall be electronic type with month duration, five inch wide visible face of approximately five inches (5”).

1) The recorder shall accept up to 4 analog inputs and provide digital indications for each connected input.

b) Recorder shall be electronic type with a data logger and remote interrogation capabilities acceptable to the District.

c) Chart recorders shall be manufactured by Chessell Model 392 or equal.

10. Operator Interface Terminal:

a) Provide programming of the pump controller LED display.

b) Provide four to twelve different screens to monitor and control the pump station by interfacing with the pump controller or PLC.

c) Screens:

1) Overview Screen

DRAFT

(a) Show the status of the Pumps and indicate alarms, pressures, flow, level, by alphanumeric characters.

(b) Show process lines graphically.

(c) Provide method to move to other screens.

2) Pumps Screens

(a) Provide all the controls and monitoring including provisions for entering set points and alternation mode for all pumps. Indicate run time, operational status and related alarms.

3) Alarm Screen

(a) List all recent alarms.

(b) Provide provisions for acknowledgement, reset and silence of new alarms.

4) Setpoints Screen

(a) Provide a screen for input of all setpoints.

(b) Include a numeric keypad and all functional requirements.

5) All pump controller or PLC information shall be available via the pump controller LED display or OIT.

11. Instrumentation Panels:

a) All pertinent receiving instruments, devices, alarms, indicating lights, and remote controls shall be mounted on centralized instrument panels.

b) All items shall be identified with engraved nameplates.

c) Electrical power to the panel and all instruments shall be through an uninterruptible power supply unit.

12. Indicating Lights and Relays:

a) Appropriate indicating lights shall be provided to show the status of equipment operation, alarms, controls, etc.

b) Indicating lights shall be of the push-to-test type or light emitting diodes (LED).

c) All relay types shall contain energized indication.

DRAFT

13. Amperage Meter:

    a) Provide an amperage meter for each sewage pump motor. Amperage metering to monitor all legs and shall monitor Run amps and Start Amps and record this data in a way acceptable to the District.

14. Integrator start-up services and witnessed factory acceptance test.

    a) Provide calibration documentation and set-up sheets on all programmable instruments.

15. Four hours of pump controller or PLC programming in the field during start-up.

16. UPS sized for instruments, pump controller or PLC, and all communications and network equipment.

17. Electronic versions of manuals, documentation and programming.

18. Attendance at a two-hour pre-submittal meeting.

19. Provide four hours of training on the pump controller or PLC and OIT and instruments.

4.06 Piping and Valves:

A. Wastewater Pump Piping:

1. Piping for wastewater pumps shall 4-inch in diameter minimum.

2. Suction piping shall 4-inch diameter minimum.

3. Piping shall be as follows:

    a) Discharge piping shall not be less than four inches (4”) and header (manifold) shall not be less than four inches (4”)

    b) . Velocities in wastewater pump:

        1) Suction from wet well:

            (a) 5 fps (desirable max.)

            (b) 6 fps (absolute max.)

        2) Discharge to header:

            (a) 7 fps (desirable max.)

            (b) 8 fps (absolute max.)

        3) Header (Manifold):

DRAFT

(a) 6 fps (desirable max.)

(b) 7 fps (absolute max.)

(c) 2 fps (desirable min.)

(d) 1.5 fps (absolute min.)

4) Discharge risers:

(a) 3 fps (absolute min.)

c) Pipe and fittings shall be ductile iron, ceramic coated on the inside.

1) Ductile iron pipe shall be Class 52-minimum or equal AWWA rating.

2) Buried pipe and fittings shall be protected on the outside with an approved corrosion protection coating and cathodic protection.

3) Zinc chromate primer shall be used on the outside for exposed piping to be painted with enamel.

4) Joints shall be flanged with flanges faced and drilled to conform to ANSI Class 125 lb. standard with fill face gaskets.

5) Adequate braces and supports shall be provided for piping to ensure no undue strains are induced.

d) Piping shall be arranged so that all pumps discharge into a common header.

1) Discharge lines shall not enter headers perpendicularly.

2) Base bends, properly supported on concrete pedestals, shall be provided at the bottom of vertical risers.

3) Headers shall be properly blocked to resist water hammer.

e) Suction lines shall have turned-down bellmouth inlets.

1) Bottom of the bellmouth shall not be more than D/2 nor less than D/3 (in which D is the diameter of the suction bell) above the floor of the wet well.

2) Reducers used on the suction side of pumps shall be of the eccentric type to prevent air pockets.

f) Gate valves in suction lines shall be provided with extension stems to floor stand operators on the ground level floor.

1) Gate valves shall be solid wedge, rising stem type with iron body, bronze trimmed, outside screw and yoke, and flanged ends.

DRAFT

2) Flanges shall conform to ANSI Class 125 lb. standard except where high pressures are encountered.

3) Valve operators for valves 16-inches or larger shall be electrically motorized.

4) All motorized actuators shall have manual operation back-up provisions

g) Swing check valves shall be provided on the discharge side of pumps and shall be placed horizontally between the gate valves and the pumps.

1) Where damaging effects of water hammer are anticipated, valves with controlled rate of closure shall be installed.

2) Swing check valves shall be iron bodied; bronze trimmed with outside lever and weight, and flanged ends.

3) Flanges shall conform to ANSI Class 125 lb. standard except where high pressures are encountered.

B. Sump Pump Piping:

1. All sump pump fixed piping in wet wells shall be schedule 80 PVC and in dry wells shall be brass.

2. A gate valve and check valve shall be installed on the discharge line.

3. Flanged joints or unions shall be provided on the discharge line to facilitate dismantling of the piping.

4. Minimum diameter of the discharge line shall be two inches (2”).

5. Velocity in discharge risers shall not be less than 3 fps.

6. The discharge point shall be installed at the highest elevation possible to prevent reverse flow when the wet well is filled to capacity.

7. Typical discharge elevation shall be under and close to the ground floor.

8. The sump pump shall be fitted with a flexible PVC hose, minimum two inches (2”) diameter.

9. Cam-lock fittings shall be provided for the PVC hose connectors to the pump and fixed piping.

C. Waste, Drain, and Vent Lines:

1. Pipe and fittings shall conform to UPC standards or local governing authority.

2. Clean-outs shall be provided as necessary and shall be solid cast brass, rough finish with square heads.

DRAFT

3. Bronze access frames and covers shall be provided for finish floors and walls.

4. Frames and covers for wall installation shall be square with polished finish.

5. Those for floor installations shall be round with scoriated finish.

6. Cleanouts shall be readily accessible.

D. Potable Water Piping:

1. Water piping and fittings shall be copper except that water piping one inch (1”) in diameter and smaller within structures shall be Type ‘K copper pipe with standard brass fittings.

E. Sprinkler System Piping:

1. Sprinkler system piping shall be solvent welded schedule 40 PVC. Lawn risers shall be PVC or polypropylene and shrubbery risers shall be galvanized steel.

F. Piping between Flow Tube and Instruments:

1. Piping between flow-tube to flow transmitter shall be one inch (1”) minimum diameter 316 stainless steel.

2. Horizontal runs shall have a minimum declining slope of one- quarter inch (1/4”) per foot from the flow tube to the in-station equipment and shall be permanently supported and braced to prevent sediment traps and/or air pockets.

3. Piping shall be connected to the flow tube on a horizontal axis.

4. 316 stainless steel valves, unions and necessary fittings shall be installed close to the flow tube to facilitate maintenance.

5. 316 stainless steel ball valves, gate valves, unions, tees and elbows shall be used on the entire system.

6. Flow transmitters and diaphragm seals shall be installed inside the pump station and mounted for easy maintenance access.

G. Pipe Sleeves:

1. Pipe sleeves shall be provided whenever small piping passes through concrete walls.

2. Wall pipe shall be used for larger piping.

DRAFT

4.07 Emergency Provisions:

Emergency facilities shall be provided to protect pump stations and the community from possible damages that may result from power failure, emergency maintenance shutdown, pumping capacity being exceeded, or other unforeseen circumstances.

A. Standby Electric Power Equipment:

1. Stations shall be equipped with a generator(s) to provide electric power to pump the design flow.
2. The generator shall be LPG, natural gas or diesel powered as approved by the District.
3. The generator's synchronous speed shall be 1800 RPM.
4. The engine- generator set shall be a new, standard, current model and in accordance with ANSI and NEMA standards.
5. Provide hardwired and/or communication connections for telemetry status interface.
6. The unit shall be manufactured by Onan, Kohler or Caterpillar.
7. Provide vehicular access including a pad for a portable generator.
8. If required the fuel day tank of approved capacity, shall be equipped with two fuel pumps with a manual feature for automatic primary and standby operations.
9. The generator may be housed in the superstructure if space permits or in a separate accessory building.
10. In all cases, noise levels shall comply with local governing authority.

    a) Operation of the emergency facilities shall be automatic upon power failure.

        1) Power failure monitors shall monitor all three phases.

        2) Monitoring of one phase of a three-phase system is not permitted.

        3) Telemetry interface shall consist of hardwired and/or network communication connections.

    b) Automatic transfer switches shall conform to PG&E requirements.

        1) When possible, bypass of the automatic transfer switch and manual override of automatic functions shall be provided.

        2) Telemetry interface shall consist of hardwired connection.

DRAFT

3) Programmable exerciser feature shall be as approved by the District. Provide ASCO 7000 Series or equal.

c) A plug for connection of a portable load bank shall be provided to fully load the generator periodically.

1) The connection shall be made to the generator side of the transfer switch via a circuit breaker.

2) This connection can also be used to connect a portable generator when the installed generator is not available for service.

d) Telemetry and SCADA systems shall be powered through an uninterruptible power supply or battery backup unit.

1) The uninterruptible power supply or battery backup system shall be sized to furnish emergency power for 30 minutes minimum when standby generator is present or 120 minutes minimum when no generator is present.

e) All switches, plug connections, circuit breakers, etc. shall be properly, clearly and permanently identified in a manner acceptable to the District.

f) Provide eight hours of start-up services and eight and four hours of training.

B. Fuel Storage System:

1. The system shall comply with Federal, State and District regulations.

2. The fuel tank capacity shall be based on two (2) days at design sewage flow and five (5) days at the daily average flow.

a) However, the fuel tank shall not be smaller than 100 gallons.

3. Underground fuel tank installation shall be designed to prevent surface water infiltration into the fuel tank system.

a) A leak alert monitor shall be provided with capabilities to display fuel inventory, and with audio and visual leak alarms.

4. Above ground fuel tanks shall have District-approved spill containment system with a capacity 10% greater than the capacity of the fuel tank.

C. Portable Pump Facilities:

1. Pump stations shall be equipped to pump wastewater from the wet well into the force main with a portable pump.

a) This shall be accomplished by providing fixed discharge and suction piping for the portable pump with connections to the force main and the wet well.

DRAFT

b) The portable pump discharge piping shall be connected to the downstream side of the flow meter tube and shall include a gate valve, 90-elbow, flanged reducer, and a blind flange.

c) The suction piping shall be connected to the wet well and shall include piping with a 90-elbow and a blind flange.

d) All piping for the portable pumps shall be sized with consideration to the capacity of the installed pumps and the operating characteristics of the available standby pumps.

e) Portable pumps shall be located near the wet well to minimize the possible occurrence of cavitation.

f) Provide vehicular access including a pad for a portable engine-driven Pump.

2. A bypass manifold shall be installed per Standard Drawing No. 19 and shall be constructed of the same type and size materials used for the station's discharge piping.

a) All cam and groove quick-connect couplers shall be interchangeable with all products produced to MIL-C 27487F specifications.

b) The District shall specify size, style and material of cam and groove coupling.

c) Discharge connection shall be located within the pump station fencing and be readily accessible.

D. Emergency Storage:

1. Emergency storage volumes shall be evaluated and approved by the District.

2. Emergency storage tanks shall be based on minimum 2-hour downtime at peak flow, or as required by the District.

3. An overflow basin may be required as determined by the District.

4.08 Miscellaneous:

A. Potable Water Supply:

1. All pump stations shall be provided with a potable water supply system for sanitary fixtures, landscape irrigation, wash down, and other maintenance purposes, as required.

2. The main water supply line and meter shall be sized for the application intended at ultimate build out, as determined by the District, and shall be equipped with a master valve and RP device located within the station's perimeter fence.

DRAFT

a) All above-ground water facilities shall be protected by a properly sized water blanket.

3. Adequate and conveniently located water outlets shall be provided for flushing and washing purposes.

   a) Hose bibs shall be 3/4-inch with vacuum breakers at all floor levels and outside of pump station.

   b) Stop cock valves shall be provided immediately before each hose bib located within the building.

4. Two conveniently located 1-1/2-inch diameter standpipes shall be provided adjacent to the wet well.

   a) The standpipes shall have 1-1/2-inch angle globe valves for National Standard fire hose thread and end cap with chain.

   b) A 3/4-inch hose bib with vacuum breakers shall be installed on the standpipe directly below the 1/2-inch globe valve.

5. Under no circumstances shall potable water supply be directly connected to sewage pumps or piping. Seal water, positive air gap and/or pneumatic water tanks shall be provided as necessary.

   a) The potable water supply system shall conform to District, State, and Federal codes and regulations.

B. Building:

1. Pump station buildings shall have maintenance-free colored exterior finish, subject to District approval.

2. District may, at its own discretion, approve a painted exterior finish.

   a) Painting shall be in accordance with the best practice and in strict compliance with the paint manufacturer's instructions and recommendations.

   b) No lead-based primer or paint shall be used.

   c) A minimum of two (2) finish coats over one prime coat shall be required.

C. Corrosion Protection:

1. All materials and equipment exposed to corrosive conditions shall be either corrosion resistant or protected with appropriate protective coatings or linings, as approved by the District.

DRAFT

D. Odor Control:

1. At the direction of the District, a system will be required which will control odors generated as a result of the pump station installation and operation.

2. Methods of odor control shall include but not be limited to, injection of enzymes, bacteria, aeration, hydrogen peroxide or odor striping media.

3. District approval is required for any and all method of proposed odor control.

4. All stations shall be provided with a 6-inch wet well vent pipe to be used for treatment of odors.

   a) The vent pipe shall be schedule 40, 316 stainless steel, permanently installed through the wet well slab and covered with a blind flange.

5. A duplex electrical receptacle, GFCI, at appropriate voltage, shall be installed to operate odor control equipment.

E. Safety Measures:

1. A davit arm receiver shall be installed at the wet wells.

2. Removable guard rails are required around the wet wells.

4.09 Other Requirements:

A. Labeling:

1. All station facilities shall be properly and permanently labeled in a manner acceptable to the District.

B. Revisions to Approved Plans and Specifications:

1. Any deviations from these specifications shall be approved in writing before such changes are made.

2. Any deviations shall be submitted well in advance of any construction work which will be affected by such changes to permit sufficient time for review and approval.

C. Operation during Construction:

1. Existing facilities and pump station units shall be kept in operation during construction.

D. Equipment Manuals:

1. Three (3) Equipment manuals shall be provided for each pump station.

DRAFT

2. The manuals shall contain sufficient information on the installation, operation, maintenance, and repair of the pump station equipment.

3. Manuals shall be bound in loose-leaf "D" binders.

4. Folders shall contain only the information in relation to the equipment furnished.

5. Each binder shall be labeled on its front cover and spine with the name of the facility and subject matter.

E. Facilities Operations and Maintenance Manual:

1. Three (3) detailed operations and maintenance manual for the facilities to be constructed shall be required for all pump station projects.

2. The manual shall give the operations and maintenance personnel the proper understanding, techniques, and any other information necessary to efficiently operate and maintain the facilities.

3. An emergency response plan, including a Spill Prevention Plan, shall also be provided to provide instructions to the operator on how emergencies are to be handled.

4. Three (3) sets of manuals shall be provided to the District.

5. Operations and maintenance manuals shall comply with all applicable State and Federal statutes, ordinances, and regulations.

F. Initial Start-Up Procedure Training:

1. Services of field engineers or qualified personnel for all equipment provided shall be required to assist and instruct the District's operating and maintenance personnel.

2. Such services shall commence before final acceptance testing.

3. Three (3) sets of manuals shall be provided to the District.

G. One Year Certification:

1. A certification shall be prepared after one year of facility operation documenting the performance of the facility.

2. This certification is intended to confirm that the facility is operating as planned and there are no problems with the equipment.

3. The certification shall be prepared by the facility designer, construction manager, or other qualified person approved by the District.

4. Any deficiencies shall immediately be corrected by the developer, at his expense.

DRAFT

H. Warranty:

1. Warranty for lift stations and all related appurtenances shall be for 18 months.

4.10 Force Mains:

A. Locations:

1. Force mains shall be located in streets and along road rights-of-way, or in separate dedicated sewer easements.

2. In locating force mains, ease of installation and maintenance and elimination of high points shall be considered.

   a) Air release valves shall be installed only as approved by the District.

   b) Valves shall not be placed in such a way that access is hindered by traffic.

3. Dual force mains may be required by the District.

   a) The minimum separation between dual force mains shall be one (1) foot from outside of pipe to outside of pipe.

B. Sizing:

1. Force mains shall be sized not less than four inches (4”) in diameter.

2. Velocities in force mains shall be as follows:

   a) Minimum: 2.5 fps

   b) Maximum: 10.0 fps

3. Force mains shall be designed to carry the maximum rate of pumping without excessive frictional head loss.

C. Materials:

1. The material selected shall be adapted to local conditions with special consideration given to the quality of wastewater, possible septic conditions, soil characteristics, internal pressure, abrasion, external loadings, foundations, necessity of reducing the number of joints and other similar problems.

2. Corrosion resistant lining, coating, wrapping, and cathodic protection shall be used when corrosion protection is required.

3. Insulating flanges or fittings may be required at entrance or exits from buildings.

4. The following material is acceptable for force mains subject to the conditions indicated:

DRAFT

a) Ductile Iron Pipe (Perma-Shield PL 431 or other approved lining)

1) Ductile iron pipe shall be tape wrapped and have cathodic protection where the force main may be subjected to external corrosion.

b) PVC C-900

1) Pressure rating shall be 150 psi minimum.

D. Minimum and maximum Cover and Clearances:

1. Shall conform to the requirements as set forth in Section 3 of these Standards.

E. Alignment and Grade:

1. Pipe shall be laid in a straight alignment and with constant grades.

2. Force mains may be curved by deflecting the joints to eliminate the necessity for fittings.

3. In no case shall the deflection exceed the maximum as set forth by the manufacturer for the type of pipe used.

4. Fittings shall be used when alignment or grade changes cannot be accomplished by joint deflection.

5. Fittings shall be long sweep as approved by the District.

F. Appurtenances:

1. Air Bleeders:

a) Air bleeders and valves shall be provided at high points.

b) A corporation stop shall be provided at the force main connection.

c) Valves shall be non-corrosive.

2. Blow Offs:

a) Blow off valves and vaults may be required where sedimentation may occur.

3. Emergency By-Pass:

a) Emergency by-pass facilities shall be provided.

4. Force Main Valves:

a) The force main shall be provided with a means to drain the line into the wet well.

DRAFT

b) In-line shut off valves, or other valves may be required at the discretion of the District.

5. Pigging Stations:

a) Pigging Stations may be required to be installed at the station, intermediate locations and the discharge point.

6. Locating Cable:

a) Direct burial locating cable shall be laid on top of and secured to force mains before backfilling as directed by the District.

b) The cable shall be as described in Section 2 of these Standards and shall be tested for continuity before acceptance.

c) Junction box(s) shall be placed at turns in the force main and, in no case shall cable extend beyond 500-feet without a junction.

d) Junction box shall be Christy G-5, identified as “Sewer” and shall be located in accordance with local governing authority and approved by the District.

7. Electronic Marker System (EMS) Ball Markers

a) Ball markers shall be buried over force main facilities at every fitting and every 50-feet along the pipeline.

b) Ball markers shall be green in color.

c) Ball markers shall have a long-lasting passive antenna encased in a waterproof shell.

8. Marking Tape:

a) Marking tape, identifying the facility as Sewer shall be placed one foot above and directly over all force main piping.

G. Structural Considerations:

1. Pipe Loads:

a) Force mains shall be designed to withstand all internal and external forces to which they may be subjected.

b) Internal forces will be the pressure from the wastewater and the water hammer effect.

c) External forces shall consider loads due to Trench backfilling and superimposed uniform and concentrated loads.

DRAFT

2. Foundation:

   a) Soil conditions shall be determined by test borings.

   b) Beddings shall be designed to adequately support pipe and minimize settlement.

   c) Bedding shall be imported material of sand or decomposed granite with 90% passing ¾ sieve and 100% passing the 1" sieve.

   d) Free of vegetative material.

   e) 90% compaction.

3. Reaction Blocks and Anchorage:

   a) Reaction blocks and anchorage shall be provided at bends and fittings and may be required at joint deflections.

4. Restrained joints may be required as determined by the District.

H. Termination:

1. Force main discharge outlets shall be designed to minimize turbulence and sulfide release and be submerged at all times.

2. The interior surface of the outlet manhole and first downstream manhole shall, at a minimum, be protected with a lining as specified in Section 2 of these Standards.

3. The severity of odors at the discharge outlet and its treatment shall be considered.

   a) A suitable odor control means shall be submitted to the District for approval.

4. Gravity connections to the force main discharge manhole and sewer service connections to the first leg of the gravity line exiting the discharge manhole will not be permitted unless approved by the District.

4.11 Performance Requirements:

The work performance for the construction of wastewater pump stations designed under these Standards shall consist of furnishing all labor, materials, tools, equipment and incidentals in constructing a complete and operational sanitary sewer lift station as shown on the design plans and as required by these specifications, including but not limited to the following: wet well, pumps, piping, utilities, electrical wiring and control systems, dry pit, force main, force main discharge manhole, generator for backup electrical power, buildings and station facilities.

DRAFT

SECTION 5: INSTALLATION

5.01 Sanitary Sewer System Construction Standards:

A. These construction criteria shall govern the installation of sanitary sewer projects located within the South Placer Municipal Utility District.

5.02 Start of Construction:

A. No construction shall begin until the following items have been complied with:

1. Two sets of approved plans and specifications (if applicable) signed by the District.

2. All fees shall have been paid and necessary permits, rights-of-way, and easements obtained.

3. A pre-construction meeting between the concerned parties and the District shall have taken place.

   a) The Contractor shall submit his planned regular work schedule and any changes thereof.

4. The Contractor shall notify the District 48 hours prior to start of the project.

   a) Should the work be delayed for any reason, the District shall be notified again prior to starting work.

5. The regional notification center (USA) and other owners of non-member facilities shall be notified no less than 48 hours prior to excavation.

6. The contractor shall be responsible for locating existing utilities. The scope of this work shall include potholing, backfill and surface restoration per the agency having jurisdiction. Where connecting to or crossing over existing District facilities, the Contractor shall uncover these facilities and verify the locations and elevations prior to performing any installation work.

7. The Contractor shall be properly licensed to perform this type of work and shall have at the project site the most current set of approved plans, with District signature, and all labor, materials, tools, equipment and incidentals to complete all work in accordance with the approved plans and these specifications.

5.03 Safety:

A. All construction shall be in strict compliance with the latest edition of the California Code of Regulations, Title 8, Division 1, Chapter 4, subchapter 4, Construction Safety Orders including, but not limited to the following items:

1. Approved hard hats and other required personal safety devices shall be worn in construction areas at all times.

DRAFT

2. All shoring utilized in any trench shall be no less effective than that required by the above referenced Construction Safety Orders.

   a) As required, the Contractor shall obtain the appropriate permit from the Division of Industrial Safety.

3. Ladders shall be used in all trenches and manholes as required in said Construction Safety Orders.

4. Temporary manhole covers, 3/8-inch minimum steel plate with a diameter equal to, or larger than the outside diameter of the structure it is covering, shall be placed on the cone until the pavement is completed.

   a) Suitable locating ribs shall be welded to the underside of the cover to hold it in place during the grading and paving operations.

5. All excavations shall be adequately guarded with barricades, lights and other means as required by the governing agency and the District.

6. Spoil piles from any excavation shall be a minimum of 2-feet from the edge of trench or greater as required by the referenced Construction Safety Orders.

7. Air test equipment including gauges shall be located outside the manhole.

   a) No personnel shall be in manholes during air pressure testing of the lines or while air pressure is in the lines.

8. The Contractor shall maintain approved traffic control at all times as required by the governing agency.

   a) Traffic control shall, at a minimum, meet the requirements of Construction Safety Orders and Cal Trans “Manual of Traffic Control”, latest edition.

9. No blasting shall be done unless a competent blaster (having a current, valid California "Blaster License") is physically present on the site to accomplish the blasting operation and/or direct and supervise others in such operation.

   a) All blasting, handling, storage and transporting of explosives shall be in strict conformance to the California Code of Regulations, Division of Industrial Relations, Construction Safety Orders and local governing agency.

10. Confined Space entry shall be in strict compliance with California Code of Regulations, Title 8, chapter 4, subchapter 7, General Industry Safety Orders. SPMUD considers all active manholes to be “Permit Required” confined spaces.

5.04 Inspection:

A. All work done and all materials and equipment furnished and installed shall be subject to the inspection and approval of the District.

DRAFT

B. Any work done without proper inspection is subject to rejection.

1. No work shall be covered until inspected and approved by the District.

2. Inspection of the work shall not relieve the Contractor of the obligation to fulfill all conditions of the contract as prescribed.

C. Inspections will not be done by the District on Sundays or holidays or other times as may be specified by the District.

1. For inspections performed after regular District business hours, on Saturdays or as 'night work,' the District's overtime policy shall be in effect A formal request in writing shall be submitted 24 hours prior to work outside of regular District business hours and is subject to approval by the District Engineer.

D. Any work, materials or equipment not meeting the requirements and intent of the plans and specifications may be rejected, and unsuitable work or materials shall be made good, notwithstanding the fact that such work or materials may have previously been inspected.

E. Inspection of facilities will not be performed where, in the opinion of the District, an unsafe condition exists.

5.05 Sewer System Plugs:

A. Temporary plugs of the mechanical type or as approved by the District, shall be installed with proper size tie line and/or braced on all sewer projects at points of connection to existing facilities and shall be installed and removed in the presence of and under the direct supervision of the District.

1. District may require that plugs be mortared in place if contractor fails to comply or if deemed necessary.

5.06 Construction Stakes:

A. The Contractor shall be responsible for all stakes set and shall verify all stakes to his satisfaction prior to installing pipe.

1. Construction stakes for sewer pipe grade and location shall be verified after any blasting.

5.07 Existing Utilities:

A. All utility, service, or other conflicting lines that are not in direct physical conflict with the sewer facility under construction, shall be worked around by the Contractor.

B. Existing sewer/new utility crossings with less than 6-inches of clearance shall be constructed as per Standard Drawing No. 17, or as otherwise required by the District.

DRAFT

1. Sewer/water crossings shall conform to the State Health Department and local water purveyor requirements.

C. Utility or other lines which are in direct physical conflict with the facility or appurtenance being constructed which cannot be avoided and which relocation is not provided for in the plans and specifications, are to be relocated by the owner of the utility prior to or during construction of the project.

1. If these relocations have not been accomplished at the time the contract is awarded, the Contractor shall schedule his work and cooperate with the owner of the utility for the relocation of the conflicting utility.

5.08 Trench Excavation:

A. Trench excavation shall include the removal of all materials or obstructions of any nature, the installation and removal of all sheeting and bracing, and the control of water, necessary to construct the work as shown.

B. Unless otherwise indicated on the drawings or permitted by the District, excavation shall be by open cut.

C. In areas requiring rock excavation, blasting or other conditions as determined by the District, the area within a 5-foot radius of the end of the pipe, or other sewer facility, shall be excavated and backfilled with native material less than 3-inches in diameter.

D. Trenches shall be excavated to provide for the bedding hereafter specified.

E. Collector sewers and building sewer lower laterals shall not be placed in any joint trench with other utilities.

1. <u>Trench Width</u>

a) Minimum trench width shall be the outside diameter of the pipe plus 6-inches on either side of the pipe.

b) Maximum trench width at the top of the pipe shall be as shown on the plans for the designated type bedding.

c) If no maximum is shown, the contractor shall conduct his operations to limit top trench width to pipe outside diameter plus 16-inches for pipe 33-inches or smaller, and pipe outside diameter plus 24-inches for pipe 36-inches and larger, except with the specific approval of the District.

d) If trench widths at the top of the pipe as shown on the plans, or specified above, are exceeded by any amount, for any reason, the contractor shall provide, at his own expense, stronger pipe or improved bedding and backfill conditions, as approved by the District, to meet the load requirement of the changed condition.

DRAFT

e) Where the plans call for the installation of sewer pipe on a curved alignment, the trench shall be excavated wider than normal as may be necessary to allow for straight-line assembly before deflecting the pipe.

1) Inserting the plain end of a length of pipe into a socket and/or a fitting under deflected conditions is not permitted.

2. Bracing and Shoring

a) To ensure the safety of everyone at the work site and to protect and facilitate the work, sufficient bracing and shoring shall be installed in all excavations as required.

1) The bracing and shoring shall comply with the rules, orders, and regulations of the California Code of Regulations, Division of Industrial Safety.

b) Failure to comply with any of the rules, orders, or regulations mentioned herein shall be sufficient cause for the District to immediately suspend the work.

c) The contractor shall be responsible for the adequacy of all shoring and bracing and compliance with the law.

1) No compensation for losses incurred by the contractor for any such suspension will be provided by the District.

3. Maximum Length of Open Trench

a) At the end of each working day, there shall be no more than 300-feet of open trench in unimproved areas or 100-feet in paved areas or less as may otherwise be required by the governing agency, excluding manhole excavations, for each operation, unless otherwise authorized by the District.

1) The remainder of the trench shall be backfilled and compacted and, when in streets, opened to traffic as soon as possible.

4. Control of Water

a) When any water from any source is encountered, the Contractor shall furnish, install, maintain and operate all necessary machinery, appliances, and equipment to keep excavation free from water until the placing of the bedding material, laying and jointing of the pipe, pouring of concrete, and placing of the shading material has been completed, inspected and approved and all danger of flotation and other damage is eliminated.

b) Water pumped from the trench shall be disposed of in accordance with local governing agency.

c) Water entering any pipe as a result of ground conditions, the Contractor's use in flushing operations, storm water, broken water pipes, or from any other condition or source is prohibited.

DRAFT

d) Trench plugs (cutoff collars, cutoff walls) shall be two-sack sand-cement slurry and shall be 4-feet long, shall key 18-inches into the trench walls and bottom, and shall extend 18-inches above the pipe crown. Trench plugs shall be installed at crossings of streams, ditches, canals, or other sources of groundwater, or as requested by the District, and shall include drains.

5. Special Foundation Treatment

a) Whenever the bottom of the trench is soft or rocky or in the opinion of the District, otherwise unsuitable as a foundation for the pipe, the unsuitable material shall be removed and replaced with crushed rock or other material as directed by the District, so as to provide a stable and satisfactory base.

b) Bedding shall be as described in Standard Drawing No. 4 of these specifications or as prescribed by a certified Geotechnical Engineer and approved by the District.

c) Where solid rock is encountered and blasting is required near the pipe bottom, the rock shall be removed to a minimum depth of 12-inches below the bottom of the pipe, and the trench backfilled with materials as specified above.

5.09 Explosives and Blasting:

A. No blasting operation shall be conducted unless a blaster having a current, valid California “Blaster’s License” is physically present on site to accomplish the blasting operation and/or direct and supervise others in such operation.

B. Blaster’s performing work for South Placer Municipal Utility District shall furnish satisfactory evidence of competency in the use and handling of explosive materials and have the necessary qualifications to safely perform the type of blasting required for the specific worksite.

C. It is the Contractor’s responsibility to obtain all permits to possess, store, use and transport blasting materials as may be required by any State, County or local regulatory agency.

5.10 Pipe Laying:

A. The pipe shall be laid in strict conformity to the prescribed line and grade.

1. Three consecutive points on the same rate of slope shall be used at all times to detect any variation from a straight grade.

2. In case any discrepancy exists, the work shall be stopped, and the discrepancy immediately reported to the District.

3. In addition, when requested by the District, a string line shall be used in the bottom of the trench to insure a straight alignment of the pipe between manholes.

DRAFT

B. Pipe laying shall proceed upgrade without sags or offset joints with the bell ends of the pipe placed upstream.

1. Each section of pipe shall be laid true to line and grade and in such a manner as to form a watertight, concentric joint with the adjoining pipe.

2. The interior of the sewer shall be cleared of all dirt, debris and excess joint sealing material as the work progresses.

3. Pipe shall not be laid when the condition of the trench or the weather is unsuitable.

4. All open ends of pipe and fittings shall be adequately and securely closed whenever the work is discontinued for more than one-half hour.

C. All pipe jointing, including the deflection of joints in curved alignment, shall be in accordance with these specifications and as recommended by the pipe manufacturer.

1. Care shall be used to prevent damage to the pipe during installation.

2. Both joint surfaces shall be clean before the joints are made.

5.11 Relative Compaction:

A. Whenever relative compaction is specified in these specifications, the relative compaction will be determined by California Test Method No. 216 or 231 or the latest State test method.

5.12 Bedding and Initial Backfill:

A. All loose material shall be removed from the new trench bottom before placing the bedding material.

1. The pipe shall be placed on a firm, prepared bed of imported material unless otherwise approved by the District.

2. Bedding shall be adequately consolidated and shall extend below the pipe barrel at least 4-inches or 1/8 of the outside diameter of the pipe, whichever is greater.

B. The Contractor shall not place backfill over the top of the pipe without inspection and approval by the District.

C. No compaction of trenches by "whacking" shall be done below the plane 12-inches above the top of the pipe bell.

D. Pipe shall not bear on bells or joints.

1. The trench shall be excavated at the pipe joints as necessary to provide at least 1-1/2-inches of bedding material below the bell.

DRAFT

2. Pinning, wedging, blocking or alternative methods to support the pipe shall not be permitted.

E. Initial backfill shall be the material placed between the top of the bedding and a point 12-inches above the top of the pipe.

F. Pipe bedding and initial backfill shall be Type II, as shown on Standard Drawing No. 4, and used as indicated on the plans or as directed by the District.

1. If trench conditions vary from that shown on the plans, see Section 5.08, "Trench Excavation."

2. The types of bedding and initial backfill are described as follows:

a) Type I

1) When approved, bedding material shall be imported crushed rock, of which 100 percent shall pass the 3/4-inch sieve.

2) Initial backfill may be selected from job excavated material so as to be finely divided and free from debris, organic matter, and pieces larger than one inch.

(a) The material shall be placed immediately after pipe joints have been completed, inspected, and passed by the District.

(b) The material shall be carefully placed so as not to disturb or damage the pipe and shall be brought up evenly on both sides so that the material fills and supports the haunch area.

(c) No special compaction need be provided.

3) Job excavated material used as initial backfill may be required to be screened prior to placement.

b) Type II

1) Bedding material shall be imported crushed rock of which 100 percent shall pass the 3/4-inch sieve and not more than 10 percent shall pass the No. 8 sieve.

2) Initial backfill shall consist of material as specified for Type II bedding placed to at least the spring line of the pipe, taking care to completely fill all spaces under the haunches.

(a) Compaction shall be obtained by shovel slicing, using care not to disturb the pipe.

(b) The remainder of the initial backfill shall be carefully placed evenly on both sides of the pipe, so as not to disturb or damage the pipe and

DRAFT

compacted by shovel slicing or light tamping to a density of at least 90 percent.

c) Type III, Type IV

1) Type III and Type IV, as shown on Standard Drawing No. 4, are not permitted without the specific approval of the District.

5.13 Intermediate Backfill (outside of City/County rights-of-way):

A. In areas outside of city and county streets or other improved rights-of-way, trench backfill above the initial backfill and to a point 2-feet below the top of the trench may be of job excavated material, free from debris or organic material, placed in any careful manner determined by the Contractor.

B. No rock over 3-inches in size shall be in the backfill material for a distance of one foot above the top of the initial backfill.

C. For the remainder of the backfill the maximum rock size shall not be greater than 6-inches.

D. Until the total backfill above the top of the pipe exceeds 3-feet, machine-placed backfill material shall not be allowed to "free-fall" more than 2-feet.

E. The District may designate the use of "Imported Select Backfill" (Section 5.17) in lieu of job excavated material.

5.14 Intermediate Backfill (in City/County Street rights-of-way):

A. Intermediate backfill in city or county street rights-of-way shall conform to the standards of the governing agency.

5.15 Top Backfill (outside of City/County rights-of-way):

A. In areas outside of city and county street rights-of-way, the top 2-feet of backfill shall be placed and compacted to a density of not less than 90 percent.

B. If the excavation is through an open area or area used for horticulture, the final 12-inches of backfill shall be essentially the original topsoil which shall have been removed and stockpiled separately.

1. The top backfill shall be thoroughly compacted by wheel rolling, then refilled with topsoil as necessary to bring the trench up to the level of the surrounding ground.

5.16 Top Backfill (in of City/County rights-of-way):

A. Top backfill in city or county street rights-of-way shall conform to the standards of the governing agency.

DRAFT

5.17 Imported Select Backfill:

A. Imported select backfill shall be crushed rock, with 100 percent passing the 3/4-inch sieve and not more than 10 percent passing the No. 8 sieve, or sand having a minimum sand equivalent of 50, as determined by California Test Method No. 217.

5.18 Other Backfill Requirements:

A. In no circumstances shall jetting be allowed in any backfilling operation.

B. Where cribbing is used in the trench, the fill shall be carried to a height sufficient to prevent the surrounding ground from cracking or caving into the trench before the cribbing is removed.

C. Backfill around manholes and the pit excavated for boring operations shall be made in the same manner as above specified for trenches

   1. However, whenever the excavated space between the outer wall of a manhole and the undisturbed earth is 12-inches or less, the backfill shall be sand, well compacted.

D. Surfaces disturbed during construction of sewer facilities shall be restored equal to or better than pre-construction condition.

E. If, at any time during a period of 5 years dating from the date of final acceptance of the project, there is any settlement of the trenches requiring repairs to be made, the District may notify the contractor to immediately make such repairs at the Contractor's expense.

5.19 Surplus Material Disposal:

A. Surplus materials, resulting from excavations or trenching operations that are not required for backfill or embankment construction or to satisfy right-of-way agreements as set forth on the plans and in the Special Provisions, shall become the property of the Contractor, and he shall dispose of the surplus materials off the rights-of-way or easements unless permitted by the District to be disposed of otherwise.

B. When any materials are to be disposed of outside the rights-of-way or easements, the contractor shall obtain written permission from the owner upon whose property the disposal is to be made before any materials are deposited thereon.

   1. The agreement shall contain provisions to relieve the District of any obligation to the property owner for any injury or damage to persons or property.

   2. The agreement shall also include a sketch showing the location where the material will be deposited.

   3. A copy of the agreement, signed by the owner or his representative, shall be furnished to the District prior to placing the materials.

DRAFT

C. Excess materials shall not be deposited in any location that will block or restrict a natural or artificial drain.

5.20 Existing Street Construction:

A. Upon completion of the backfilling operation, the street shall be restored in accordance with the governing agency's requirements.

5.21 Boring and Jacking:

A. Boring and Jacking shall conform to the following:

1. General

a) Unless otherwise specified on the plans, the design, engineering methods and equipment used in boring and jacking casing or conduit shall be optional with the Contractor, provided that the proposed method is approved by the appropriate entities either by supplemental drawings or permit.

b) The equipment, method and sequence of operation and conductor pipe grades shall be approved by the District before proceeding with the work.

c) Excavation for the boring operation shall be the minimum necessary to satisfactorily complete the work.

1) Bracing and shoring shall be adequate to protect workers and any adjacent structure or roadbed.

2) Special backfill requirements may be specified for pipe installed in the area excavated for the boring operations.

2. Boring under Curb, Gutter and Sidewalk

a) Portions of sanitary sewer and building sewers that pass beneath curbs and gutters, sidewalks and other obstructions may be placed by boring if approved by the District.

1) If under the curb, gutter and sidewalk, the bore shall begin at the lip of the gutter and continue to slightly past the property line.

2) The end of the pipe shall then be capped or plugged, and the pipe pushed into the hole.

b) If the building sewer is vitrified clay pipe, it shall be plain end pipe connected with compression type couplings as described in Section 2 of these specifications.

1) The bore shall be just large enough to pass the couplings and need not be backfilled.

DRAFT

2) The maximum length of bore shall be 15-feet unless otherwise specified.

c) Boring shall not be used on building sewers when the required slope is such that probable deviation of the bore from the intended line would result in a final slope of less than 1/4 inch per foot.

5.22 Manholes:

A. All manholes shall be of concrete construction and shall conform to Standard Drawings No. 5 and No. 6 as to size, shape and details, unless otherwise specified. Elevations shall be as shown on the plans.

B. Manhole bases may be either precast or cast-in-place (unless specifically directed by the District).

1. If precast, bases shall conform to ASTM Designation: C478 and be placed on a minimum of 8-inches of 3/4-inch crushed rock.

2. Elevation differentials of inlets and outlets shall conform to Section 3 of these specifications and to the plans.

3. To prevent pipe shearing, short stubs (12” to 24” in length) shall be used at all pipe-to-manhole connection points with flexible joint (bell and spigot or approved coupling) at the manhole walls and at the pipe stub ends.

4. Compression couplings used at shear joints shall be as described in Section 2 of these specifications and be installed per manufacturers recommendations.

5. Water stops shall be used for all cast in place manholes and all field modified manholes.

C. Manhole bases constructed on existing sewer lines shall be formed around the perimeter by the use of an impression ring to receive the manhole barrel.

1. The pipe inside the manhole shall not be cut out until directed by the District.

2. All work shall be done in the presence of the District.

3. Cast in place manhole bases shall not be constructed on rainy days unless approved by the District.

D. Pipe stubs for future sewer extensions shall be installed into the structures as shown on Standard Drawing No. 5.

1. The outer ends of the stubs shall be sealed securely by an approved cap.

2. Stubs greater than 5’ in length shall have flushing branch installed per Standard Drawing No. 9.

DRAFT

E. Unless otherwise indicated, flow channels shall be constructed in the manhole base by fillets as shown on Standard Drawing No. 5.

1. Special care shall be taken to form smooth transitions between inlets and outlets, with good hydraulic properties.

2. Any sharp corners or departure from the dimensions indicated shall be cause for rejection.

3. Pipe may be laid continuously through straight run manholes and the top half of the pipe subsequently cut out inside the manhole.

F. Any channel not intended to be used shall be filled with concrete. No deflections, fittings or reducers shall be used outside of manholes except as specified for drop connections.

G. When constructing manholes, sealing compound (per Section 2 of these specifications) shall be placed between all joints per manufacturer's recommendations.

1. In addition, mortar shall be squeezed into all joints in the barrel, cone, and grade rings and the joint areas troweled smooth on the inside of the manhole.

2. Outside joints shall be primed and wrapped with an external concrete joint wrap as described in Section 2 of these specifications.

H. Manhole frames and covers shall be set flush with the finish grade unless otherwise shown on the plans.

1. Manholes in unimproved or backyard easement areas shall have bolt down covers, with a minimum of four (4) stainless steel socket head cap screws per cover and shall be set 6-inches above existing ground level, with a concrete collar.

2. Manhole frames and covers in unimproved areas subject to flooding shall be fitted with 1/4" O-ring secured with adhesive and shall be set 12-inches above any designated 100-year flood plain.

3. The area adjacent to the manhole shall be graded to drain away from the manhole.

4. The District may require a concrete pad, per Standard Drawing 19, in areas where the terrain is such that it inhibits entry into the manhole.

5. The adjustment of new and/or existing manhole frames and covers to finish grade in any roadway, or in other locations as required by the District, shall conform to the following:

a) The maximum amount of grade rings shall not exceed 11-inches per Standard Drawing No. 5.

DRAFT

1) If the amount of grade rings will exceed 11-inches, the cone shall be excavated and removed, and an additional manhole barrel section shall be installed with the cone then reinstalled, and the manhole vacuum tested in accordance with Section 5.34 of these specifications.

(a) If the cone is damaged during excavation and removal, a new cone shall be installed.

I. Unless otherwise directed by the District, manhole rims shall be set to grade in all access road areas and the covers shall be bolt down type.

J. Raised manholes outside of public right-of-way shall require a composite frame and cover.

K. Prior to backfill of any manhole, the manhole must be vacuum tested, and all leaks shall be repaired by the Contractor.

5.23 Connections to Structures:

A. Pipe connections to existing manholes and other structures shall be made by smooth bore cutting.

1. Connections shall be made using flexible watertight pipe-to-manhole connectors or other connection methods approved by the District.

B. Channelizing of the flow through the manhole shall conform to the details shown on the Standard Drawing No. 5 for new manholes.

C. The Contractor shall notify the District 48 hours before a connection is made to an existing structure.

1. The Contractor shall schedule his work so that interruption of flow is held to a minimum.

D. Every effort shall be made to avoid coring at a manhole seam unless otherwise approved by the District.

5.24 Drop Connection:

A. Inside Drop connections as detailed on Standard Drawing No. 7 shall be constructed at manholes where the plans specifically indicate an inside drop connection for a 6-inch or 8-inch sewer.

B. Outside drop connections as detailed on Standard Drawing No. 8 shall not be used unless otherwise approved by the District.

C. For all drop connections, the top of the inlet pipe shall be a minimum of two 2-feet below the bottom of the manhole cone, unless otherwise approved by the District.

DRAFT

D. Inside drop connections shall be constructed using all ABS or PVC pipe, fittings, primer and cement.

E. Pipe joints and fittings shall be primed and joined with cement as recommended by the pipe manufacturer.

F. Manholes with drop connections shall have a lining to protect against hydrogen sulfide corrosion in accordance with Section 2.11 of these Specifications.

5.25 Flushing Branches:

A. Flushing branches shall be constructed as shown on Standard Drawing No. 9 at the locations shown on the plans.

B. Size and type of pipe and fittings shall be the same as the sewer to which the flushing branch connects.

5.26 Connections to Existing Facilities:

A. The Contractor shall notify the District 48 hours in advance to schedule a field meeting before a connection is to be made to existing sewer facilities.

1. The District will make all connections to sewer facilities upon payment of fees unless the Contractor is otherwise directed to make the connection.

B. When directed by the District, the Contractor shall make the sewer connection and shall schedule his work so that interruption of flows is held to a minimum.

C. The contractor shall expose the end of existing pipe to be extended, for verification of alignment, elevation, material, and size and shall pressure test and TV inspect existing pipe in the presence of the District.

1. All defects shall be corrected by the contractor prior to connecting.

5.27 Building Sewer Lower Laterals:

A. Residential building sewer lower laterals installed normal to the collector system and as part of an improvement project shall be constructed as shown on Standard Drawing No. 10 and at the locations shown on the plans.

1. Unless otherwise specified, they shall be 4-inch diameter, conform to these Standard Specifications, and constructed to the property line or as indicated on the improvement plans.

2. A regularly manufactured wye fitting shall be used in the collector sewer for each lower lateral and shall be inclined upwards at a minimum angle of 10 degrees from the horizontal. Refer to Standard Drawing No. 10.

B. Normal residential lower lateral size shall be 4-inches.

DRAFT

1. Lower laterals for schools and commercial and industrial developments shall be 6-inches unless otherwise noted on the plans.

2. A 6-inch lower lateral shall enter a 6-inch collector sewer by means of a manhole but may enter an 8-inch or larger collector sewer by means of a factory wye.

3. Eight-inch and larger lower laterals shall be connected to the sewer by use of a manhole.

C. Unless otherwise noted on the plans, the depth of cover of the lower lateral at the easement or property line shall be not less than 4-feet nor greater than 7-feet below existing ground or edge of adjacent roadway, unless otherwise approved by the District.

D. An elevation given on the plans with a lower lateral represents the invert elevation at the easement or property line.

1. The elevation given shall be the maximum allowable elevation, and the minimum slope of the lower lateral shall be 1/4-inch per foot unless otherwise noted.

E. Lower laterals entering a manhole shall be set to an invert to crown match with the outgoing pipe unless inside drops are approved to be used.

F. <u>Connection to Existing Sewer</u>

1. When a lower lateral is to be connected to an existing sewer facility, the work shall be done only by a Contractor licensed to perform such work.

2. The District will retain the right to use its own forces to make such a connection.

3. Application shall be made to the South Placer Municipal Utility District and the required fees paid at least 48 hours in advance of when the tap is desired.

4. All excavation and backfill and the installation of the remainder of the lower lateral shall be done by the Contractor.

(Note: The above applies when the lower lateral is constructed as a part of an improvement contract. For requirements regarding the installation of an individual lower lateral, see Section 7 of these Standard Specifications and contact the South Placer Municipal Utility District.)

G. <u>Curb Mark</u>

1. When curb and gutter exists or is to be constructed concurrently with the sewer facilities, the location of each lower lateral shall be permanently indicated by inscribing or stamping the letter "S" in the face of the curb directly above the line when the lower lateral is perpendicular to the street centerline.

2. The "S" mark for a skewed or angling lower lateral shall be placed at a right angle to the end of the lower lateral.

DRAFT

3. When lower laterals are installed in an existing street, the curb mark shall be placed at the time the lower lateral is installed to assure proper location.

4. In new subdivisions when the lower laterals are installed before the curb is constructed, it shall be the Contractor's responsibility to establish the exact location of each lower lateral and the curb and gutter Contractor's responsibility to place the "S" in the curb after it is poured.

H. Property Line Cleanout

1. A Property Line Cleanout (PLCO) and building sewer upper lateral extension shall be constructed as shown on Standard Drawing No. 12 and shall be installed when called for on improvement plans or as directed by the District.

2. An Inspection Cleanout shall be installed on lower laterals and sewer stubs when called for on improvement plans or as directed by the District. Inspection Cleanouts are to be constructed as shown on Standard Drawing No. 11.

5.28 Force Main and Pump Station:

A. Pump stations shall conform to the applicable requirements of Section 4, "WASTEWATER PUMP STATION" of these specifications, as specified in and as shown on the plans, and as specified in Section 74, "Pumping Plant Equipment" of the State Specifications.

5.29 Adjusting to Grade:

A. All new and existing sewer appurtenances including, but not limited to, manholes, cleanouts and flushing branches within the project boundaries shall be adjusted to grade by the Contractor and shall be completed prior to acceptance of the project, whether the work is done by City or County forces or by a private Contractor.

B. Project boundaries shall include areas on and off roadways.

5.30 Abandon Existing Facilities:

A. Existing sewer pipes and facilities, where shown to be abandoned, shall be completely removed and disposed of and the trench backfilled in accordance with these specifications as directed by the District.

B. Abandonment in place shall require specific approval by the District.

C. Abandoning sewer pipes and facilities in place shall conform to the following:

1. Sewer pipes shall be completely filled with sand or other material approved by the District.

   a) Sand backfill material shall be clean, free draining and free from roots and other substances.

DRAFT

2. All openings into existing structures, that are to be abandoned in place, shall be closed with a 6-inch thick, non-shrink concrete plug.

3. At the option of the District, the sewer pipe shall be completely crushed in place and the trench backfilled in accordance with these specifications.

4. Asbestos Cement Pipe is a hazardous material and shall be treated in accordance with OSHA guidelines,

5. Manholes shall have the upper sections (including all cone sections), removed to a minimum depth of 18-inches below surface grade.

   a) The bottom of the manhole shall be perforated or broken to prevent the entrapment of water and filled with sand or other material approved by the District.

   b) Salvaged frames and covers are the property of the District and shall be delivered to the District upon removal from the system or disposed of as directed by the District.

5.31 Access Roads:

A. Access roads shall be constructed in conformance with these Standard Specifications, the applicable Sections of the State Specifications (excluding Measurement and Payment sections), or as shown on the plans.

   1. Access roads shall have a minimum drivable surface width of 12-feet on straight sections.

   2. Turns and curved sections shall conform to the turning requirements detailed in Standard Drawing No. 13 of these specifications.

B. Access roads shall be constructed at the locations shown on the plans.

   1. Aggregate base shall be Class 2, 3/4-inch maximum.

   2. Asphalt concrete shall be type B, 3/4-inch maximum, and medium grading.

C. Relative compaction of not less than 95 percent shall be obtained for a minimum depth of 0.5-foot below the grading plane for the width between the outer edges of the access road, whether in excavation or embankment.

D. Compaction test results shall be provided to the District.

E. Any alternative surface treatment approved by the District shall be constructed and tested in accordance with manufactures recommendations.

DRAFT

5.32 Grease Control Devices and Sand Oil Separators:

A. Grease control devices shall generally be installed in accordance with manufacturer's recommendations and as required by the District.

   1. Manufacturer's installation specifications shall be provided to the District upon request.

B. All loose material shall be removed from the excavation bottom before placing the bedding material.

   1. Bedding shall be a minimum of 8-inches of properly consolidated 3/4-inch crushed rock upon stable ground or as prescribed by a Geotechnical Engineer.

C. Grade rings used for access points shall not exceed 36-inches (measured vertically) unless approved by the District.

D. Prior to backfill, all outside joints shall on gravity grease interceptors be filled with an approved non-shrink grout or as specified by the manufacturer and grease interceptor shall be tested for leaks in the presence of the District.

E. Hydromechanical grease control devices shall be tested per manufacturers recommendations.

F. Gravity grease control devices shall be tested hydrostatically per manufacturers recommendations.

G. All grease control devices shall be cleaned, pumped out, and empty prior to final inspection.

H. Venting to be approved by the governing building department.

5.33 Clean-up:

A. During the progress of the work, the Contractor shall keep the entire job site in a clean and orderly condition.

B. Spillage resulting from hauling operations along or across existing streets or roads shall be removed immediately by the Contractor.

C. The Contractor shall govern his operations and methods at all time to minimize dust problems within the area of the work or along adjacent properties.

D. Water or dust palliative shall be applied as required to provide adequate control of dust to the complete satisfaction of the District or other governing agency.

5.34 Acceptance Tests:

A. All sewers shall be tested in the presence of the District.

DRAFT

B. The Contractor shall notify the District 5 days prior to scheduled tests.

C. Order of Acceptance Tests

1. Unless otherwise directed by the District the following order of testing shall be followed:

a) Manhole Vacuum Test

b) Visual (CCTV) Test

c) Air Test

d) Deflection Test

e) Force Main and Pump Station Testing

f) Final Cleaning

g) Final Walk-Through Inspection

D. ACCEPTANCE TESTS:

1. MANHOLE VACUUM TEST

a) All sewer manholes shall be vacuum tested for leakage after assembly but prior to backfilling around the manhole.

1) The Contractor shall furnish all labor, tools, and equipment necessary to make the test and perform any work incidental thereto.

2) The Contractor shall correct any excess leakage, and repair any damage to the manhole and its appurtenances at his expense.

b) Prior to testing, all lift holes shall be plugged with an approved non-shrink grout.

1) All outside joints shall be primed and wrapped with approved external concrete joint wrap.

2) All channels in precast bases that are not intended to be used shall be abandoned by installing a mechanical, water-tight plug and filling the channel with concrete prior to performing the vacuum test.

3) Boots for inside drops shall be installed prior to performing the vacuum test.

c) All pipes entering the manhole shall be plugged, taking care to securely brace the plug(s) from being drawn inside the manhole.

DRAFT

1) The test head shall be placed at the inside of the top of the cone section and the seal inflated in accordance with the manufacturer's recommendation.

2) A vacuum of 10-inches of mercury shall be drawn and the vacuum pump shut off.

3) With the valves closed, the time shall be measured for the vacuum to drop to 9-inches.

4) The manhole shall pass if the time is greater than:

60	seconds for a	48	inch diameter manhole
75	seconds for a	60	inch diameter manhole
90	seconds for a	72	inch diameter manhole
120	seconds for a	84	inch diameter manhole

d) If the manhole fails the initial test, necessary repairs shall be made with a non-shrink grout while the test is still being drawn.

1) Retesting shall proceed until a satisfactory test is obtained.

2. VISUAL (CCTV) TEST

a) Visual internal inspection of all sewer pipes and laterals installed by the Contractor shall be performed in the presence of the District using Contractor furnished and operated closed circuit television (CCTV) survey equipment, all at the expense of the Contractor.

1) The sewer pipe shall be cleaned using a combination high pressure vacuum unit in accordance with Section 5.34D.3.k)2)(a) of these specifications prior to CCTV.

2) The television test shall be done after compacting sub-grade, after all other utilities and subsurface structures have been installed.

3) Immediately prior to CCTV, under the direction and in the presence of the District, an ample amount of water to fill all low spots or sags shall be introduced into the line.

4) A target shall be pulled in front of the camera during CCTV inspection test to determine the depth of standing water in sags. A ½-inch target shall be used in 6 to 10-inch diameter pipes. A one-inch target shall be used in pipes 12-inches in diameter and larger.

5) Any defects observed shall be repaired in the presence of the District.

DRAFT

b) The District may require the Contractor to perform pre- and post-CCTV inspections on projects requiring repairs, new construction or street improvements over or adjacent to existing public and private sewer pipes to check for any damage done to the sewer pipe.

1) The pre-CCTV test will be completed prior to construction to document existing conditions.

2) The post-CCTV test will be completed after placing and compacting base rock, but prior to placing the final course.

3) Any damage observed during the post-CCTV test shall be repaired by the Contractor at their expense in the presence of the District.

4) Repairs shall again be CCTV inspected to the satisfaction of the District.

5) Closed circuit television inspection of existing lines shall be done only after cleaning the system using a combination high pressure vacuum unit in accordance with Section 5.34D.3.k)2)(a) of these specifications.

c) CCTV equipment shall be specifically designed and constructed for operation in connection with inspection of sewer pipes and laterals.

1) The CCTV system shall include all equipment necessary for color monitoring. The equipment shall allow for the export of videos and reports of data collected during inspections in digital/electronic format.

2) CCTV equipment shall include footage counter equipment that communicates with the video capture to allow for the distance to be displayed on the screen overlay.

3) Lighting and camera quality shall be suitable to provide a clear, in-focus picture of the inside periphery of the pipe.

4) The camera shall be mounted on a transporter or skids suitable for the size pipe under investigation.

5) CCTV shall be performed using either ‘Rotating Head’ or ‘Pan & Tilt’ or any other camera capable of providing an undistorted full view inspection up sewer laterals, services and manholes. Push cameras used to inspect laterals shall have a self-leveling head. The camera shall provide a 360-degree undistorted wall view perpendicular to the camera.

6) An accurate water depth gauge, satisfactory to the District, shall be an integral part of the system.

d) The camera shall travel with the flow, from manhole to manhole in one continuous pull unless directed otherwise by the District.

DRAFT

1) In no case shall the camera move at a speed greater than 30-feet per minute.

e) The screen overlays shall indicate: Report or Job Number; Facility Identification; Date of Inspection; and Distances.

1) Color digital recordings of the TV monitor shall be made of each entire stretch and provided to the District, immediately upon completion of the work, in digital/electronic format, acceptable to the District.

2) The Disk shall be labeled indicating the project name, the date of the inspection and, if more than one disk is required for a project, each disk shall be numbered indicating Disk 1 of 2, Disk 2 of 2, etc.

f) Written or digital reports of the CCTV inspection shall be kept on each stretch inspected with CCTV.

1) Reports shall be on forms provided or approved by the District.

2) Each report shall include the project name, the date of the inspection, the manhole ID's, the pipe diameter and the pipe type.

3) Each log shall be filled out completely and contain remarks indicating, the inspection starting and ending points; all damaged or defective pipe, changed conditions, lower lateral locations and the corresponding footages and other information as required by the District.

3. <u>AIR TEST</u>

a) After aggregate base "rock grade" has been placed and compacted and just prior to the final surface being applied, all sewers shall be air tested for leakage.

1) Sewer pipes may require additional air testing as directed by the District.

b) When the air test is performed, the air pressure gauge shall remain outside the manhole.

1) Personnel performing the test shall remain outside the manhole after they have inserted plugs and necessary equipment.

2) Any plugs requiring extra bracing to keep them in the line shall be braced mechanically.

3) The air gauge shall be disconnected from the compressor after inflating and for the duration of the test.

c) When sewer lines are installed in areas where the road will be built in the future under a separate contract, an acceptance test shall be performed at final grade.

DRAFT

1) Immediately prior to any future roadwork or extensions to the line or service laterals installed in the line, another test shall be performed by the road Contractor to demonstrate the then current, acceptable condition of the sewer.

2) At the completion of the roadwork, another acceptance test shall be performed by the road Contractor to demonstrate to the District that the roadwork has not disturbed the integrity of the sewer line.

d) The Contractor shall furnish all labor, materials, tools, equipment and appurtenances necessary to make the air tests and to perform any work incidental thereto.

1) The Contractor shall, at his own expense, correct any excess leakage and repair any damage to the pipe and its appurtenances or to any structures indicated by or resulting from these tests.

2) All repairs shall be made in the presence of the District.

e) Testing of vitrified clay pipe shall be in conformance with ASTM C828, latest edition “LOW PRESSURE AIR TEST OF VITRIFIED CLAY PIPE”.

f) Air Test

1) The Contractor shall test all sewer pipes by means of the air test specified herein unless otherwise directed by the District. Length of line tested at one time shall be limited to the length between adjacent manholes.

2) All lower laterals shall be tested to the satisfaction of the District.

3) Air test procedure shall be as follows:

(a) Pressurize the test section to approximately 4 psi.

(b) Allow up to 5 minutes for the pressure to stabilize.

(c) Add air if necessary to keep the pressure above 3.5 psi.

(d) At the end of this 5-minute saturation period, note the starting pressure (shall be 3.5 psi minimum) and begin the timed period.

(e) If the pressure drops more than 1.0 psi in less than the time given in the following table, the section of pipe has failed the test.

(f) Pressure in the line shall not be allowed to exceed 5 psi gauge pressure.

DRAFT

Minimum Test Time for Various Pipe Sizes

Nominal Pipe Size (in.)	*T* (time), (min / 100 ft)	Nominal Pipe Size (in.)	*T* (time), (min / 100 ft)
4	0.3	21	3.0
6	0.7	24	3.6
8	1.2	27	4.2
10	1.5	30	4.8
12	1.8	33	5.4
15	2.1	36	6.0
18	2.4	39	6.6
		42	7.3

4) For larger diameter pipe use the following formula:

   (a) Min. time in seconds = 370 x pipe diameter in feet.

5) When the prevailing ground water is above the sewer pipe being tested, air pressure shall be increased 0.43 psi for each foot the water table is above the invert of the sewer pipe.

6) For 8-inch or smaller pipe only, if during the 5-minute saturation period, pressure drops less than 0.5 psi after the initial pressurization and air is not added, the section undergoing test shall have passed.

7) If the test is not passed, the leaks shall be located, repaired and retested.

8) The pressure gauge used shall be supplied by the Contractor, shall be graduated to 15.0 psi (maximum) in increments of 0.5 psi, shall be liquid filled and shall have an accuracy of 0.05 psi.

   (a) Accuracy and calibration of the gauge shall be certified by a reliable testing firm at 6-month intervals or when requested by the District.

   (b) In addition, the District may compare the Contractor's gauge with a District owned gauge at any time.

g) Infiltration Test

1) In lieu of an air test, at the direction of the District, the District may require an infiltration test.

DRAFT

(a) The water infiltration test shall be in accordance with the latest edition of the Standard Specifications for Public Works Construction, "GREENBOOK", Section 306-1.4.3.

h) Hydrostatic Test

1) The hydrostatic test may be used in lieu of the air test for building sewers only, with the approval of the District.

2) Hydrostatic testing may be permitted by the District for other sewer facilities.

3) When any leaks occur in a tested sewer facility the contractor shall locate, repair and retest it before the sewer facility is accepted.

i) Deflection Test

1) All flexible mainline sewer pipe shall be tested for excessive deflection. This shall be performed after aggregate base "rock grade"" has been placed and compacted and just prior to the final surface being applied, but in no case sooner than 30 days after the pipe backfilling/compaction operation.

2) Testing shall be conducted from manhole to manhole and shall be done after the line has been completely cleaned and flushed. If the test section fails the test it shall be excavated and repaired or realigned, and retested. The use of re-rounding devices are prohibited.

3) Deflection gauges (mandrels) shall be used to test flexible sewer pipe for out-of-roundness or deflection per ASTM specifications D3034 and F679.

(a) The mandrel shall be rigid, nonadjustable, odd-numbered-leg (9 legs minimum) with an effective length not less than its nominal diameter.

(b) Outside dimension shall be sized to permit no more than 5.0 percent deflection.

(c) The percent deflection shall be established from the base inside diameter of the pipe.

(d) The mandrel shall be approved by the District prior to use.

j) PUMP STATION AND FORCE MAIN

1) The pump station and force main shall be tested as follows:

(a) Pump Station Testing

(1) The pump station shall be tested for operation in all phases to the requirements and satisfaction of the District.

(b) Pressure Testing of Force Main

DRAFT

(1) Pressure testing of the force mains shall be made on all completed pipelines.

(i) When applicable, testing shall be performed prior to paving.

(ii) The tests shall be a water pressure test at 120 percent of the maximum operating pressure.

(2) When leakage exceeds the amount allowed by these specifications, the Contractor shall locate and make necessary repairs or replacements to reduce the leakage to the specified limits.

(i) Any individually detectable leaks shall be repaired, regardless of the results of the test.

(3) The pipeline to be tested shall be filled with water for at least 48 hours prior to the pressure test.

(i) The pipeline shall then be brought up to the test pressure and maintained for a minimum of 4 hours.

(4) The Contractor shall provide accurate means to measure the quantity of water required to maintain full pressure on the line.

(i) The gallons used shall not exceed the following:

$$L = (CND\sqrt{P})/1850$$

Where:

L	=	Maximum allowable leakage in gallons per hour
N	=	Number of joints in test
D	=	Diameter of pipe in inches
P	=	Test pressure in psi
C	=	0.50

(ii) No leakage is allowed for welded steel pipe or all glued PVC pipe.

k) <u>FINAL CLEANING</u>

1) All sewer pipes and laterals shall be cleaned prior to acceptance.

2) Acceptable methods for cleaning sewer pipes and laterals include the use of combination high pressure vacuum cleaners.

(a) <u>Combination High Pressure/Vacuum Cleaners</u>

(1) Only combination high pressure/vacuum cleaning units specifically designed for cleaning sewer mains and manholes shall be used.

DRAFT

(i) The unit shall deliver adequate water pressure, using the appropriate nozzle, to provide a scouring action in all sizes of pipe to be cleaned and the operator shall control the travel speed to the satisfaction of the District.

(ii) The quality of the cleaning operation shall be adequate to remove all debris from the pipe.

(2) The vacuum system must be capable of removing all dirt, grease, rocks, sand, and other materials and debris from the sewer line and manholes.

(3) All solids or semisolids resulting from the cleaning operation shall be removed from the site and disposed of at an approved sanitary site at the end of each day.

(4) The Contractor shall be responsible and repair or replace, at no cost to the District, any damage to lines, facilities or property caused as a result of the cleaning operations.

(5) No water or debris shall be allowed to enter District maintained sewer lines.

5.35 Final Walk-Through Inspection:

A. The Contractor shall notify the District of the completion of the work, and the District shall inspect the work.

1. The Contractor or his representative may be present at the final inspection.

2. The Contractor shall be notified by the District of any defects or deficiencies to be remedied.

3. Within 10 days of the notification, the Contractor shall proceed to correct such deficiencies or defects.

4. Upon notification that this work has been completed, the District shall again inspect the work for compliance with the intent of the contract and with the plans and specifications.

5.36 Field Acceptance of Project:

A. No project will be field accepted by the District until all testing has been performed and completed and records of all testing submitted to the District.

5.37 District Acceptance of Project:

A. No project will be accepted by the District Board of Directors until Field Acceptance and the submittal of the following completed items.

DRAFT

1. One PDF version of the original improvement plans plotted to full size scale showing all changes made during construction and labeled “Record Drawings” or “As-Built Plans”.

2. A full digital version (complete with all layers) of the original improvement plan drawings in AutoCAD 2016 format as either .DWG or .DXF files, showing all changes made during construction and labeled “Record Drawings” or “As-Built Plans”.

   a) AutoCAD files shall have the improvements drawn in the SPMUD coordinate system (see Section 1.11).

3. A fully executed Bill of Sale from the project owner(s)/developer(s) to the District transferring title to all sewer lines and appurtenances (those required to be dedicated to the District) free and clear of all liens and encumbrances.

4. One PDF version of the recorded Final Map of the development or other instrument evidencing the creation of easements and Rights-of-Ways for the public sewers.

5. Payment of all fees due to the District.

6. Pump stations acceptance shall require submittal of 3 bound copies and one PDF copy of the pump station plans, specifications, parts breakdown, and operation and maintenance manuals.

5.38 Guarantee:

A. Should any failure of the work occur within a period of one year after acceptance of the project “Bill-of-Sale” by the District Board of Directors, which can be attributed to faulty materials, poor workmanship, or defective equipment, the Contractor shall promptly make the needed repairs at his expense.

B. The District is hereby authorized to make such repairs if the Contractor fails to make or undertake with due diligence the aforesaid repairs within 10 days after they are given written notice of such failure; provided, however, that in case of emergency where, in the opinion of the District, delay would cause serious loss or damage, or a serious hazard to the public, the repairs may be made or lights, signs and barricades erected without prior notice to the Contractor and the Contractor shall pay the entire costs thereof.

C. Warranty CCTV inspection will be performed within 12 months of District acceptance of the project.

5.39 Repairing Installed Improvements:

A. <u>REPAIRING INSTALLED IMPROVEMENTS</u>

1. Sewer mains, manholes, lower laterals, and appurtenances shall be repaired per these Construction Standards and by the following procedures.

DRAFT

2. The use of clamps or couplings will not be allowed as a means of repair.

   a) Method of Repair

      1) Vitrified Clay Pipe

         (a) Damaged pipe shall be exposed and replaced in-kind by "bridging" new pipe into place.

         (b) Sagging or misaligned pipe shall be exposed and corrected in place.

            (1) Defective pipe shall be replaced as described in "**a.**" above.

      2) Ductile Iron Pipe

         (a) Damaged pipe shall be removed and replaced in kind by "bridging" new pipe into place.

         (b) Damaged protective lining and exposed metal shall be repaired in strict accordance with manufacturer's recommendations.

         (c) Sagging or misaligned pipe shall be exposed and corrected in place.

            (1) Defective pipe shall be replaced as described in "**a.**" above.

      3) PVC Pipe

         (a) Damaged pipe shall be removed and replaced in kind by "bridging" new pipe into place.

         (b) Sagging or misaligned pipe shall be exposed and corrected in place.

            (1) Defective pipe shall be replaced as described in "**a.**" above.

   b) Any excavation for repairs shall be backfilled and compacted as described in the special provisions and these specifications.

   c) All repairs shall be tested as described in Section 5.34 of these specifications.

DRAFT

SECTION 6: EASEMENTS & RIGHTS OF WAY

6.01 Intent:

A. It is the District's intent that all sewer facilities will be located within dedicated public street right-of-way, unless specifically approved by the District for construction within easements.

B. The District shall have all-weather drivable access over every manhole and all portions of every mainline sewer pipe to perform inspections, operation and maintenance, rehabilitate, repair, and reconstruct its facilities.

6.02 Requirements:

A. Every sewer pipe and sewerage facility to be dedicated to and maintained by the District shall be constructed within public street rights-of-way, within dedicated sewer easements, or within exclusive sewer easements granted to the District.

B. The rights-of-way requirements are to acquire rights to facilitate access to, operation and maintenance of, repair, rehabilitate, and reconstruct the sewer facilities.

1. Sewer easements granted to the easement shall be in a standard District format and shall contain the following terms and conditions:

   a) No buildings, structures, walls, fences, or trees, including the drip line, shall be placed upon, over or under said parcel of land within the easement for the duration of this easement, except as shown on improvements plans approved by the District and except that said parcel may be improved and used for street, road or driveway purposes trail, path parking lot, non- vehicular public access, or shallow root landscaping purposes and for other utilities, insofar as such use does not interfere with the District's use of and access to the easement for the purposes for which it is granted.

   b) The District shall not be liable for any damage to any of the Grantors(s) improvements placed upon said parcel due to the District's operations using reasonable care.

   c) Should any of the District facilities within said easement be required to be relocated or repaired as a result of changes in grade or other construction within the easement, the Grantor(s) or its successors and assigns shall bear the full cost of such relocation or repair, unless changes in grade or other construction are done with the prior written consent of the District.

   d) The Grantor shall not allow any obstructions which may impede or interfere with the District's use of or access to said easement.

   e) The District shall have the right, but not the obligation to cut, trim, remove trees, brush, and/or remove other unauthorized obstructions which may impede or interfere with the District's use.

DRAFT

f) The District accepts no responsibility for or liability to Grantor or any other party for any damages arising out of the installation, use, maintenance, ownership or operation of other utilities or any other improvements within District's easement and right of way.

g) All provisions of this easement, including the benefits and burdens, run with the land and are binding upon and inure to the Grantor(s), the District, and their heirs, assigns, successors, tenants and personal representatives.

h) The Signatory for Grantor(s) shall warrant that it has the legal authority to bind the party hereto and Grantor(s) warrant that it may legally grant the rights described herein.

2. For each easement submitted, a legal description and exhibit, with original signature(s) of the property owner(s) and notary signature/seal is required.

C. In addition to the minimum requirements defined herein, the District may from time to time, for specific projects, impose additional rights-of-way or improvement requirements to resolve special problems such as turnaround space.

D. The land required for wastewater pump station facilities to be dedicated to and maintained by the District shall be granted to the District in Fee Title.

E. All rights-of-way, easements, and land for construction of sewer facilities associated with a specific project (both on-site and off-site) shall be provided by the Owner, at the Owner's expense and at no cost to the District.

6.03 Street Location:

A. For new subdivisions, sewer pipes shall be located 6-feet off of the street centerline.

1. Alignment shall be parallel to the street centerline wherever possible.

B. For sewer pipes to be constructed in existing streets, factors such as curbs, gutters, sidewalks, traffic conditions, pavement condition, future street improvement plans, and presence of existing utilities shall all be considered in fixing the sewer pipe alignment.

C. The approval of all appropriate governing agencies shall be obtained in every instance.

6.04 Sewer Easements:

A. The use of easements outside of public street rights-of-way for routing sewer pipes shall be kept to a minimum and then only with the approval of the District.

B. Minimum Easement Widths

DRAFT

1. For sewer pipe less than 27-inch I.D. (inside diameter), at a maximum depth of 10-feet, measured from proposed ground level to flowline of pipe, the width of required permanent easement is 20-feet.

2. For larger sewer pipe sizes, the following table shall apply:

Pipe Size (I.D.)	Minimum Easement Width
27" up to 48"	25-feet
48" and above	30-feet

3. For all mains with depths greater than 10-feet, measured from proposed ground level to flowline of pipe, the following equation will apply:

   Easement Width = ((Depth of Pipe – 4-feet) x 2) + (O.D. of Pipe) + (2-feet)

   Note: Easement width is rounded up to the nearest 5-feet.
   Depth of Pipe measured in feet.
   O.D. is outside diameter of pipe measured in feet.

4. Easements shall not exceed fifty (50) feet in width unless required by special circumstances.

5. The sewer pipe centerline shall be located at the center of the easement unless otherwise approved by the District. The sewer pipe centerline shall be located at least half of the minimum easement width from the edge of the easement.

C. Easements shall not straddle property lines.

D. Permanent structures such as, sound walls, retaining walls, and trees are not allowed within sewer easements.

E. Trees shall be planted so that the dripline of the tree at maturity is located entirely outside of the sewer easement.

F. Plans shall note that joint utility trench structures, boxes, pads, transformers, and service points shall be prohibited in the sewer easement area.

6.05 Sewer in Public Utility Easements:

A. The use of public utility easements (P.U.E.'s) for routing sewer pipes is not permitted unless specifically approved by the District.

B. When sewer facilities are approved to be located in public utility easements, care shall be taken to comply with all health and safety standards for grade and separation of sanitary sewer pipes from other utilities.

C. The minimum width of public utility easements with sewer facilities and the location of sewer facilities within the public utility easement shall comply with Section 6.04B.

DRAFT

D. If determined necessary by the District, a separate easement shall be provided.

DRAFT

SECTION 7: BUILDING SEWERS

7.01 Building Sewer Standards:

A. These building sewer criteria shall govern the installation of an individual building sewer upper lateral.

B. The requirements for a building sewer lower lateral shall generally conform to Sections 3 and 5 of these Standard Specifications except where otherwise provided in this Section.

C. In the case of development projects, the building sewer lower lateral is installed normal to the installation of the development's sewer improvements and shall conform to the Standard Specifications.

7.02 Permit Required:

A. Prior to performing any work that would alter in any way the building sewer or any sewer appurtenance, a written permit must be obtained from the District.

7.03 Costs Borne by Owner/Applicant:

A. All costs and expenses incidental to the installation and connection of any building sewer to the District's facilities shall be borne jointly and severally by the owner/applicant thereof and said owner/applicant shall indemnify the District from loss or damage that may directly or indirectly be occasioned to any party by the installation of the building sewer.

7.04 Use of Existing Building Sewers:

A. Existing building sewers may be used in connection with new structures only when they are found, after examination and test, to meet all of the requirements of the Standard Specifications.

B. All examinations and testing shall be done by the record owner of the real property under District inspection.

1. Said owner shall be responsible for all associated costs for such examinations and testing and shall be responsible to correct all deficiencies at his/her expense prior to making connection; provided however, that in cases when the building sewer lower lateral has previously been in service with the District, the District may opt to perform repairs on the lower lateral at its expense.

7.05 Separate Building Sewer Required:

A. A separate and independent building sewer shall be provided for every structure on a parcel; provided, however, that the provisions of this Section may be waived by the General Manager.

DRAFT

1. If waived by the General Manager, two or more structures on a single parcel, under one ownership, may be served by the same common upper lateral if it is unlikely, under local agency zoning and general plans, that the parcel can be subdivided in the future.

2. If for any reason, the property is subsequently divided, each building is required to then be separately and independently connected to the public sewer.

   a) It shall be unlawful for the owner(s) of the subdivided property to thereafter continue to use in common the same building sewer.

7.06 Material:

A. Upper Lateral:

1. The building sewer upper lateral shall be ductile iron pipe 431 conforming to ANSI/AWWA Standard C151/A21.51 with ceramic epoxy lining, vitrified clay pipe ASTM designation C700, or ABS Schedule 40 ASTM designation D2661, PVC SDR 26 ASTM designation D3034, or DWV Schedule 40 ASTM designation D1785-15e.

   a) DWV pipe shall have marking tape, clearly labeled “sewer”, securely fastened to the top of the pipe.

2. The building sewer upper lateral shall be laid on a firm bedding consisting of native soil free of debris and rocks larger than 1-inch which meets the approval of the District. Other suitable material such as sand, pebble rock/pea gravel, or 3/4-inch crushed rock may be used in lieu of native soil.

3. Pinning, wedging, blocking or alternative methods to support the pipe shall not be permitted.

B. Lower Lateral:

1. The building sewer lower lateral materials shall be in accordance with Section 2.1 of these Specifications.

2. The lower lateral shall be bedded in accordance with Section 5.12 of these Specifications.

C. All joints on the building sewer shall be gas tight and waterproof. No paint, varnish or other coating materials shall be permitted on the joints.

7.07 Size and Slope:

A. Single Family Residential:

1. Building sewers shall be four inches (4”) in diameter.

2. Slope shall not be less than 1/4-inch per foot unless otherwise approved by the District.

DRAFT

B. Commercial:

1. Commercial building sewers and multi-family residential building sewers shall be not less than six inches (6”) in diameter.

2. Slope shall not be less than 1/8-inch per foot unless otherwise approved by the district.

7.08 Installation:

A. The installation of building sewers shall be as follows unless otherwise permitted by the District:

1. Excavation:

a) Open Trench Required

1) All excavation required for the installation of a building sewer shall be open trench work unless otherwise approved by the District, and shall be in conformance with all applicable rules, regulations, and laws of any city, county, state, or federal agency having jurisdiction.

b) Safety

1) All excavations for sewer installations shall be adequately guarded in accordance with current California Occupational Safety and Health Administration (Cal OSHA) regulations and local governing agency requirements so as to protect the public from hazard.

c) Restoration

1) Streets, sidewalks, parkways, utilities, and other public property disturbed in the course of work shall be restored to the satisfaction of the District and to the satisfaction of the governing body of the entity in which the public property affected may be situated.

d) Trench Foundation

1) Whenever the bottom of the trench is soft or rocky or in the opinion of the District, otherwise unsuitable as a foundation for the pipe, the unsuitable material shall be removed and replaced with crushed rock or other material as directed by the District, so as to provide a stable and satisfactory base.

2) Ductile Iron pipe may be required as determined by the District.

2. Pipe Laying:

a) Elevation

1) Whenever possible, the building sewer shall be brought to the building below the lowest floor elevation.

DRAFT

b) Grade and Alignment

1) The building sewer shall be laid at a uniform grade and in straight alignment.

2) Changes in direction shall be made only as necessary and with properly curved pipe fittings.

3) Ninety-degree fittings shall be the long-sweep type.

4) No building sewer shall be laid parallel to or within three feet (3') of any bearing wall.

c) Utility Separation

1) Upper laterals shall maintain a minimum clearance of 12" horizontal and 12" vertical from water lines unless otherwise approved by the District. Water lines shall be approved by water utility company and/or local jurisdictional agency.

2) Upper laterals shall maintain a minimum clearance of 12" horizontal and 6" vertical from dry utilities unless otherwise approved by the District. Dry utilities shall be approved by dry utility company and/or local jurisdictional agency.

3) All utility crossings shall be designed with the crossing being perpendicular, unless a variance is approved by the District. In no case shall pipes cross at less than a 45° angle.

4) Common utility trenching shall be in accordance with the Uniform Plumbing Code (UPC) and approved by the District on a case-by-case basis.

d) Depth

1) The depth of cover shall be in accordance with the latest edition of the Uniform Plumbing Code (UPC).

2) If the depth of cover of any portion of the pipe within the public right-of-way is less than three feet (3') as measured from the finish surface to the top of pipe, the entire pipe within the right-of-way shall be ductile iron pipe.

3. Cleanouts:

a) Cleanout Boxes

1) Property Line Cleanouts (PLCO) for residential development, shall be an F-8 Christy or approved equal concrete valve box with cast iron lid marked "S" or "Sewer".

2) Property Line Cleanouts (PLCO) for commercial development shall be traffic rated G-5 Christy or approved equal concrete valve box with cast iron lid marked "S" or "Sewer".

DRAFT

3) Building cleanouts in high traffic areas shall be traffic rated G-5 Christy or approved equal concrete valve box with cast iron lid marked “S” or “Sewer”.

4) Building cleanouts in landscape areas may be a plastic landscaping box marked with “Sewer”.

b) Property Line Cleanout

1) A Property Line Cleanout (PLCO) shall be required on the building sewer at the property line /easement/right-of-way line.

c) Building Cleanout

1) A two-way cleanout shall be installed within two feet of the building footing, unless otherwise approved by District.

2) Single stack two-way cleanouts may be installed when depth of cover is less than 36-inches and shall conform to Detail Drawing C of these Specifications.

3) Building cleanouts installed in excess of 36-inches shall conform to Detail Drawing C of these Specifications.

d) Other Cleanouts

1) In-line cleanouts shall have a maximum spacing of 100-feet.

2) Other cleanouts such as change in alignment cleanouts and in-line cleanouts shall be required and installed in accordance with the latest addition of the UPC.

e) Accessibility

1) All cleanouts shall be extended to finished grade, properly fitted with appropriate cap/plug and be readily accessible for the purpose intended.

2) The surrounding area shall be graded to drain away from any cleanout.

4. Backwater Valves:

a) Elevations Requirement

1) A backwater valve shall be provided on any building sewer where the building pad elevation is lower than the top of manhole immediately up stream on the collector sewer serving the parcel or in instances where the manhole immediately up stream will not provide relief.

b) Installation

1) The backwater valve shall conform to and be installed in accordance with the latest edition of the UPC and as otherwise required by the District.

DRAFT

The backwater valve shall be readily accessible and have an integral gate retrieval device conforming to Detail Drawing B.

5. Private Sewage Pump Systems:

a) Where Required

1) In all buildings in which any building drain is too low to permit gravity flow to the collector sewer, wastewater carried by such drain shall be lifted by artificial means and discharged to the back of the property line cleanout or where gravity flow can be achieved along the upper lateral.

2) Such artificial means and discharge facility shall be in accordance with the latest edition of the UPC and the following:

(a) Residential Sewage Pump Systems

(1) The residential pump system and its components shall be designed for the purpose intended and shall be of such design as to provide the most optimum number of pump cycle times throughout the day and/or night so as to prevent a septic waste discharge to the public sewer.

(2) Prior to installation, the owner/applicant/contractor shall submit, for District approval, the pump design parameters demonstrating that it is appropriate for the application.

(b) Commercial Sewage Pump Systems

(1) Complete improvement plans for the design of a commercial sewage pump system shall be submitted to the District for review and approval.

(c) General Requirements

(1) The building sewer discharge line from the building drain shall be gravity flow to the sewage pump tank and must include a two-way cleanout within two feet (2;') of the building footing.

(2) No sewage pump tank shall be located within five feet (5') of any exterior wall or any structure.

(3) Private force mains shall not be constructed within the public right-of-way.

(4) The electrical connections and tank venting shall be inspected by and meet the codes and regulations of the building department of the jurisdiction issuing the building permit.

(5) Pumps shall have an alarm system with a visual component. All electrical components shall be inspected by the local jurisdictional

DRAFT

agency. Prior to installation, the owner/applicant/contractor shall submit for District approval, the pump design parameters demonstrating that it is appropriate for the application.

(6) Tank operating capacity shall not exceed 100 gallons unless approved by the District.

6. Taps into Collector Sewer:

a) When the installation of an individual building sewer requires a connection of the lower lateral to the collector sewer, the tap will be made by the District unless otherwise authorized.

1) Field Meet Required

(a) The owner/applicant/contractor shall contact the District to arrange a field meet prior to the tap and sewer installation. The owner and contractor are required to attend the field meeting with District representatives.

2) Payment of Fees

(a) The Tap Fee, in accordance with the District's Fee Schedule Resolution, shall be paid prior to the tap.

3) Owner/Applicant/Contractor Responsibility

(a) The owner/applicant/contractor responsibilities generally include, but are not limited to, all excavation, necessary safety devices, acquisition of any permits required by other agencies, exposing the collector sewer, providing pipe, bedding and backfill materials, and backfilling and surface restoration.

4) District Responsibility

(a) The District will provide the tap fitting/material and make the connection to the collector sewer.

(b) The District will install the lower lateral to the property line/right-of-way line using the owner/applicant/contractor supplied pipe and bedding materials.

(c) The District will install the property line cleanout (PLCO) provided the materials are supplied by the owner and onsite at the time the tap occurs.

7.09 Inspections:

A. All sewer work related to the installation and/or repair of a building sewer shall be subject to District inspection.

1. "Rough Inspection"

DRAFT

a) Open trench inspection of pipe and fittings bedded to springline from building two-way to property line cleanout (PLCO).

2. "Final Inspection"

a) CCTV inspection of installed pipe after all improvements and construction is complete, including landscaping, over the top of the pipe.

B. The applicable inspection fee, in accordance with the District's Fee Schedule Resolution, shall be paid prior to inspection. The District reserves the right to apply additional inspection fees for excessive inspections due to non-compliance with District Standards.

C. No backfill shall be placed until the work has been inspected by the District.

1. In the event of a violation of this requirement, the sewer facilities must be uncovered at the owner/applicant's expense, and the District shall have the right to disconnect the property from the District sewer system until such violation is corrected. The owner of the property shall pay to the District a reconnection charge in accordance with the District's Fee Schedule Resolution prior to the reconnection, together with all costs and expenses incurred by the District in making such reconnection.

7.10 Testing:

A. Testing of the building sewer is required and will be inspected by the District as part of the "Rough Inspection".

B. Temporary pipe fittings for testing purposes (e.g., "test tees" and "test wyes") shall only be used for connections to an existing sewer upper lateral and as approved by the District.

C. Either a water test or air test is acceptable and shall be performed as follows:

1. <u>WATER TEST</u>

a) The test shall be performed in accordance with the latest edition of the UPC.

2. <u>AIR TEST</u>

a) The air test shall be performed in accordance with Section 5 of these specifications.

D. Sewer test plugs shall be of the inflatable or mechanical type. Test plugs shall be fully removable and retrievable of all components.

7.11 Water, Dirt and Debris Entering the System:

A. At no time shall any water, dirt or debris be allowed to enter the existing system.

B. The only exception to this is clean water used for testing the building sewer.

DRAFT

C. It is the owner's responsibility to ensure compliance by use of appropriate cap or plug over pipe ends at any time work is not in progress.

D. If it becomes necessary for the existing sewer system to be cleaned, because of owner's non-compliance, the owner will be required to perform the cleaning work under District inspection, at the owner's expense.

E. In some instances, the District may perform the work and will require that the owner reimburse the District for labor, equipment, materials, etc. prior to acceptance.

F. A CCTV inspection may be required, at the discretion of the District, at the owner's expense.

7.12 Abandonment:

A. Any building sewer to be abandoned or that will be unused, including building sewers from structures to be demolished, shall be done in the following manner:

1. The Building sewer upper lateral shall be physically disconnected from the building sewer lower lateral immediately behind the Property Line Clean Out (PLCO) or disconnected at that point in cases where there is no PLCO, by removing a short section of the upper lateral and securely capping both ends of the exposed building sewer.

2. The point of disconnection shall be properly backfilled.

3. If there is no PLCO, the pipe end shall be marked with a 4" x 4" x 4' (long) redwood post, painted green, and a #8 copper wire attached to both the post and the pipe end.

4. The District may, in certain cases, require that the building sewer lower lateral be physically removed up to the collector sewer, and the Wye, Tee or connection fitting securely plugged off.

5. The abandonment of a building sewer shall be done in the presence of the District and all work is subject to District inspection and approval.

7.13 Building Sewer Repairs:

A. Repairs made to existing building sewers shall conform to applicable provisions of this Section including, but not limited to, permits, costs, materials, excavation, inspection and backfill.

B. Trenchless repairs made to existing building sewers shall be installed only after the correction of defects such as sags and offsets are made via a point or spot repair. Trenchless repairs shall conform to applicable provisions of this Section including, but not limited to, permits, costs, materials, excavation, inspection and backfill.

DRAFT

7.14 Damage to Existing Facilities:

A. Any damage to the District sewer facilities or lower lateral caused as a result of the installation of a building sewer shall be the responsibility of the owner/applicant, and the owner/applicant shall be responsible for all costs incurred by the District.

7.15 Building Sewer Detail Drawings:

A. Detail drawings related to the installation of a building sewer are contained in this section as follows:

1. Drawing “A”—Property Line Cleanout to Grade
2. Drawing “B”—Backwater Valve, Typical
3. Drawing “C”—Building Sewer
4. Drawing “D”—Residential Pump System
5. Drawing “E”—Typical ADU and Outdoor Kitchen Layout

DRAFT

KEYNOTES:

1. F-8 CHRISTY (OR APPROVED EQUAL) CONCRETE VALVE BOX WITH CAST IRON LID MARKED "S" OR "SEWER," INSTALLED BY BUILDING CONTRACTOR.
2. 4-INCHES x 18-INCHES x 18-INCHES CONCRETE PAD IN REMOTE LOCATIONS AS DIRECTED.
3. ALTERNATE CONNECTION USING COMBINATION WYE FITTING. ABS MATERIAL ONLY - ONLY AS APPROVED BY THE DISTRICT.
4. ¾-INCH CRUSHED A.B. BEDDING MATERIAL EXTEND 1-FOOT BEYOND WYE (BOTH DIRECTIONS).
5. FOUR BAND SHIELDED REPAIR COUPLING AT MATERIAL TRANSITIONS AS APPROVED BY THE DISTRICT.
6. BACKFILL MATERIAL, SEE STANDARD DRAWING NO. 4.
7. WYE 45° WITH LONG RADIUS 45° BEND.
8. BUILDING SEWER LOWER LATERAL.
9. BUILDING SEWER UPPER LATERAL.
10. CAP SHALL BE NON-CORROSIVE. CHERNE INDUSTRIES "END OF PIPE GRIPPER PLUG", MODEL 270245, OR APPROVED EQUAL, INSIDE WING-NUT TWIST PLUG.
11. GLUE JOINT.

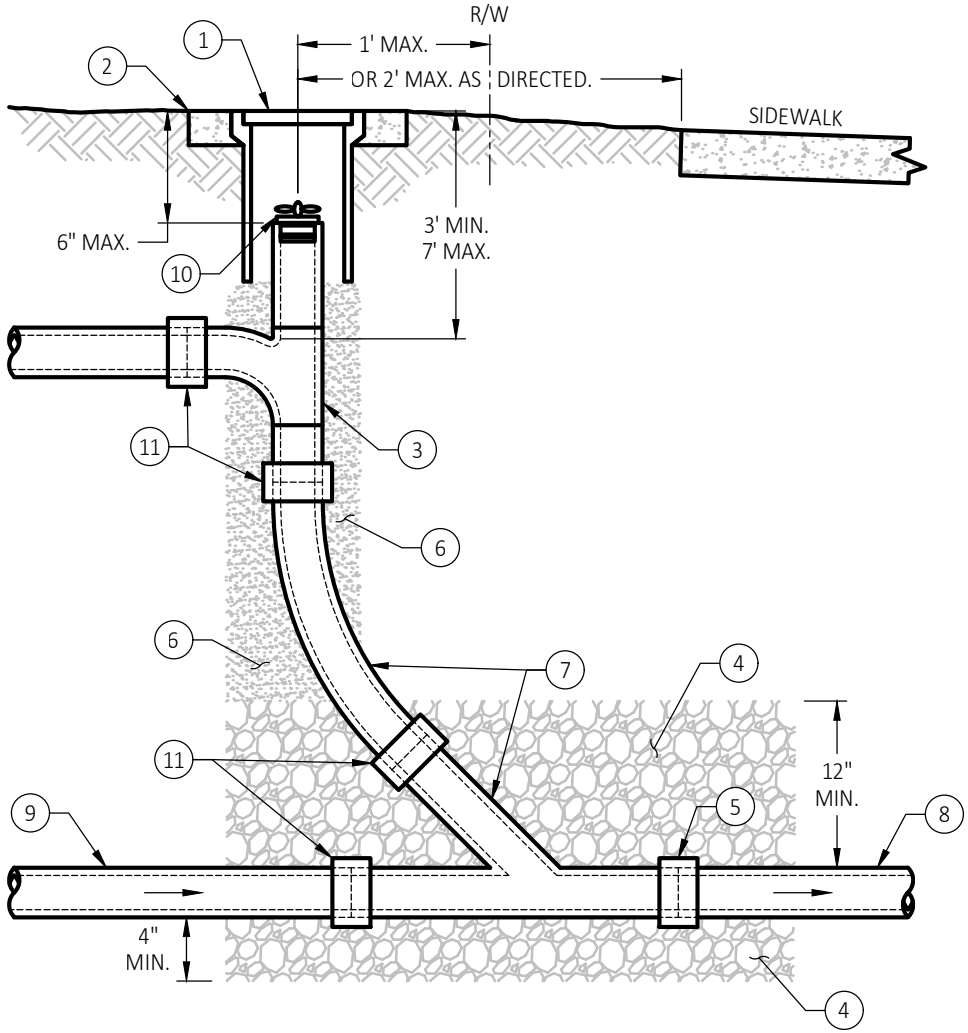

NOTES:

1. ALL DRAWINGS ARE NOT TO SCALE.
2. ALL CLEANOUT PIPE AND FITTINGS SHALL BE THE SAME SIZE AS THE LOWER LATERAL TO WHICH IT CONNECTS, UNLESS OTHERWISE DIRECTED BY THE DISTRICT. MATERIALS TO CONFORM TO SECTION 7.06 OF THESE SPECIFICATIONS
3. STACK SHALL BE STRAIGHT AND VERTICAL (PLUMB).

SOUTH PLACER MUNICIPAL UTILITY DISTRICT

PROPERTY LINE CLEANOUT (PLCO) TO GRADE

APPROVED BY:	REVISION DATE:	DRAWING:
DRAFT CARIE HUFF, P.E. DISTRICT ENGINEER	4/7/21	A

KEYNOTES:

1. BACKWATER VALVES SHALL HAVE AN INTEGRAL GATE RETRIEVAL DEVICE - MAINLINE BACKFLOW PRODUCTS "ADAPT-A-VALVE" OR APPROVED EQUAL. SEE DETAIL FOR CLEANOUT AND VALVE ARRANGEMENT.
2. PVC ACCESS SLEEVE TRIM OR SHAPE TO FIT AGAINST BACKWATER VALVE. CAP REQUIRED FOR ABOVE GROUND APPLICATION.
3. TWO WAY CLEAN OUT AS REQUIRED BY LOCAL AUTHORITY FOR SECOND FLOOR, SEE STANDARD DRAWING C FOR TWO WAY CLEANOUT DETAIL.
4. PROPERTY LINE CLEANOUT, SEE DRAWING DRAWING A.
5. WYE 45° WITH LONG RADIUS 45° BEND.
6. UPSTREAM MANHOLE.
7. UTILITY BOX. MINIMUM 3" CLEARANCE ALL SIDES FROM RISERS.

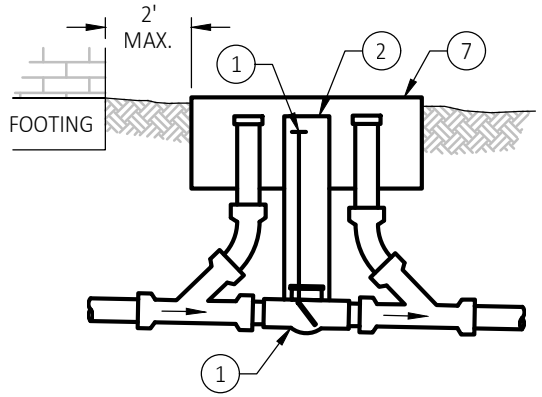

BACKWATER VALVES AND CLEANOUT ARRANGEMENTS

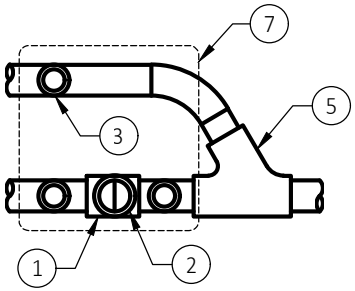

PLAN

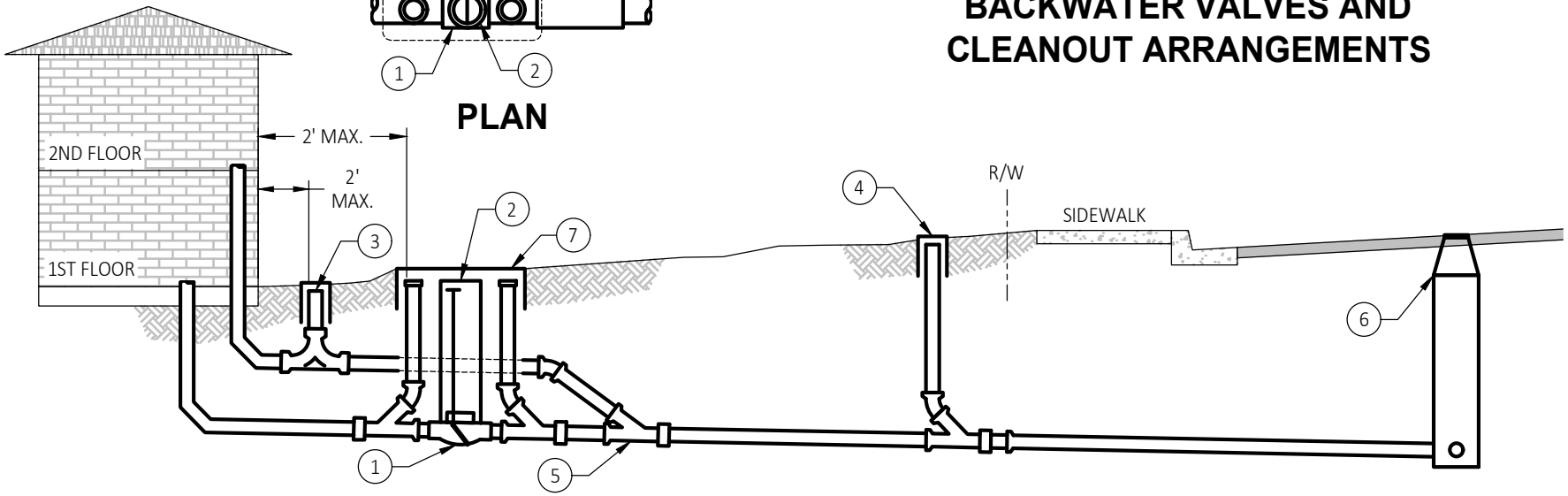

ELEVATION

NOTES:

1. ALL DRAWINGS ARE NOT TO SCALE.
2. CLEANOUT BOX(ES) MARKED WITH "S" OR "SEWER" SET TO GRADE. TRAFFIC RATED BOX(ES).

SOUTH PLACER MUNICIPAL UTILITY DISTRICT

TYPICAL BACKWATER VALVE

APPROVED BY:	REVISION DATE:	DRAWING:
DRAFT CARIE HUFF, P.E. DISTRICT ENGINEER	4/7/21	B

KEYNOTES:

1. TWO WAY CLEAN OUT. CLEANOUT BOX FLUSH WITH FINISHED SURFACE FOR BELOW GROUND APPLICATION. CLEANOUT BOX(ES) MARKED WITH "S" OR "SEWER" SET TO GRADE.
2. PROPERTY LINE CLEANOUT, SEE STANDARD DRAWING A.

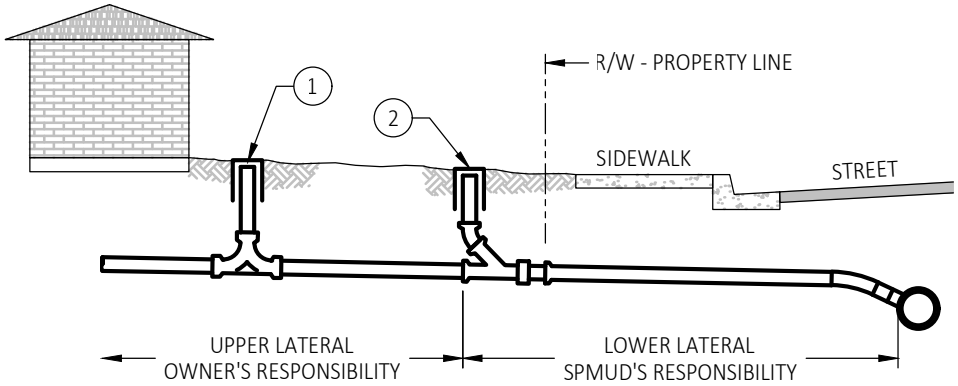

BUILDING SEWER

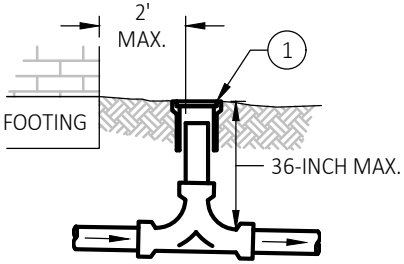

OPTIONAL CONFIGURATION FOR LATERALS THAT ARE 36-INCHES OR SHALLOWER

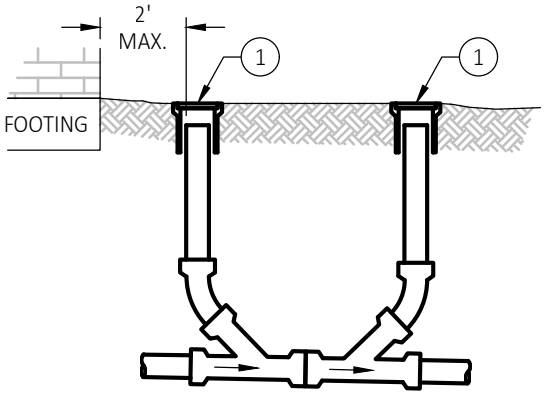

REQUIRED CONFIGURATION FOR LATERALS THAT ARE DEEPER THAN 36-INCHES.

TWO WAY CLEANOUT

INSIDE WING NUT TWIST PLUG
CHERNE® END-OF-PIPE GRIPPER® PLUGS MODEL 270245 OR APPROVED EQUAL (FOR ANY CLEANOUT).

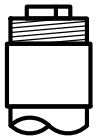

THREADED ABS PLUG WITH SLIP x THREAD COUPLING (FOR TWO WAY & IN-LINE CLEANOUTS ONLY).

CLEANOUT CAPS AND PLUGS

NOTES:

1. ALL DRAWINGS ARE NOT TO SCALE.

SOUTH PLACER MUNICIPAL UTILITY DISTRICT

BUILDING SEWER DETAILS

APPROVED BY:	REVISION DATE:	DRAWING:
DRAFT CARIE HUFF, P.E. DISTRICT ENGINEER	4/7/21	C

KEYNOTES:

1. TWO WAY CLEAN OUT, SEE STANDARD DRAWING C.
2. PROPERTY LINE CLEANOUT, SEE STANDARD DRAWING A.
3. STORAGE TANK WITH SEWER PUMP. TANK SHALL NOT EXCEED 100 GALLONS. TANK TO BE INSTALLED IN SUCH A MANNER THAT IT WILL NOT RECEIVE STORM OR OTHER WATER NOT INTENDED.
4. TANK VAULT FOR ACCESS TO PUMP AND TANK . THE VAULT SHALL HAVE OPENINGS FOR PIPES TO PASS THROUGH WITHOUT THE VAULT RESTING ON THE PIPES.
5. 4-INCH GRAVITY BUILDING SEWER.
6. FORCE MAIN HALL HAVE A CONTINUOUS UPHILL SLOPE.
7. 4-INCH GRAVITY LOWER LATERAL.
8. CHECK VALVE.
9. SHUT-OFF VALVE.
10. UNION.
11. 3/4-INCH CRUSHED ROCK GRAVEL BEDDING.
12. VALVE BOX.
13. SEE APPLICABLE DISCHARGE DETAIL ABOVE.
14. SEWER FORCE LINE SHALL CONNECT TO THE BACK OF PROPERTY LINE CLEANOUT.

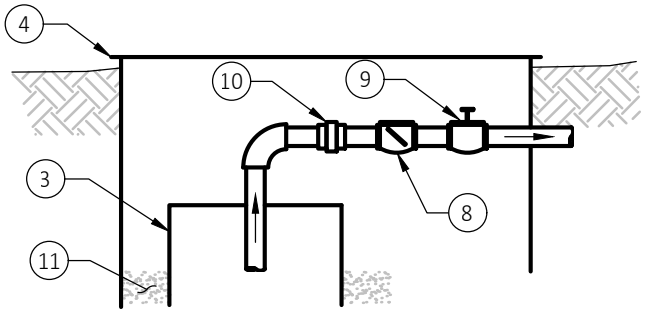

TOP DISCHARGE

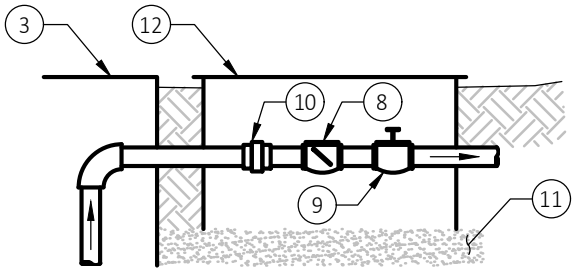

SIDE DISHCARGE

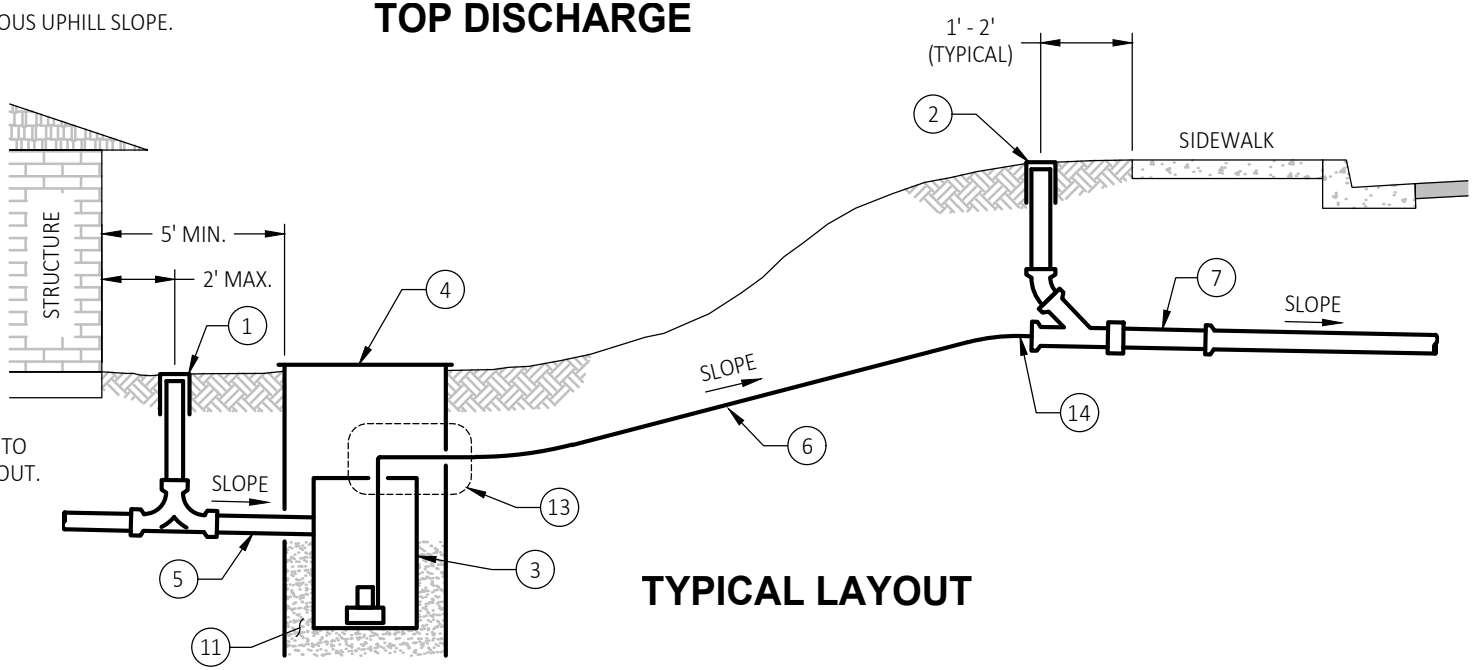

TYPICAL LAYOUT

NOTES:

1. ALL DRAWINGS ARE NOT TO SCALE.
2. PUMP AND TANK MUST BE PLACED IN AN ACCESSIBLE LOCATION.
3. ELECTRICAL PUMP ALARM REQUIRED.
4. ELECTRICAL CONNECTIONS AND TANK VENTING TO BE INSPECTED AND APPROVED BY GOVERNING LAND JURISDICTION.
5. PRIOR TO INSTALLATION, THE OWNER/APPLICANT/CONTRACTOR SHALL SUBMIT FOR DISTRICT REVIEW AND APPROVAL, THE PUMP DESIGN PARAMETERS DEMONSTRATING THAT THE PUMP IS APPROPRIATE FOR THE APPLICATION.
6. TANK CAPACITY SHALL NOT EXCEED 100 GALLONS UNLESS APPROVED BY THE DISTRICT.
7. IN THE CASE OF PUMPS FOR A SECONDARY DWELLING UNIT, THE PRIMARY RESIDENCE SHALL HAVE A BACKWATER VALVE INSTALLED AT THE EXISTING TWO-WAY CLEANOUT.

SOUTH PLACER MUNICIPAL UTILITY DISTRICT

RESIDENTIAL PUMP SYSTEM

APPROVED BY:	REVISION DATE:	DRAWING:
DRAFT CARIE HUFF, P.E. DISTRICT ENGINEER	4/7/21	D

KEYNOTES:

1. PROPERTY LINE CLEANOUT, REFERENCE DRAWING DRAWING A.
2. TWO WAY CLEAN OUT WITHIN 2 FEET OF BUILDING FOOTING, REFERENCE STANDARD DRAWING C.
3. BACKWATER VALVE REQUIRED UNLESS APPROVED BY THE DISTRICT, REFERENCE STANDARD DRAWING B.
4. CLEANOUT WITH 45° WYE.
5. PRIMARY STRUCTURE.
6. ADU OR OUTDOOR KITCHEN.
7. ANGLE FITTINGS ONLY AS NECESSARY. 45° FITTINGS SHALL BE THE LONG-SWEEP TYPE.
8. PARCEL LINES, TYPICAL.
9. BACK OF WALK.

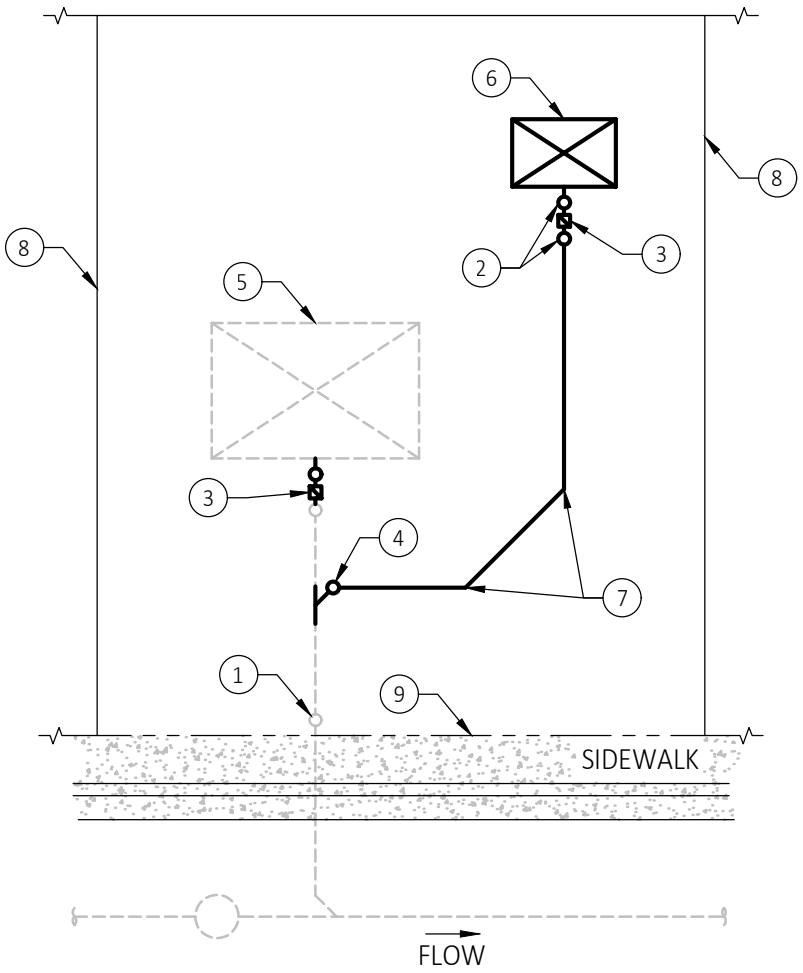

NOTES:

1. ALL DRAWINGS ARE NOT TO SCALE.
2. SEE SECTION 7 OF THESE SPECIFICATIONS FOR LATERAL SPECIFICATIONS.
3. CLEANOUT BOX(ES) MARKED WITH "S" OR "SEWER" SET TO GRADE.
4. AN ACCESSORY DWELLING UNIT (ADU) SHALL TO BE A MAXIMUM OF 1,200 SF AND NO GREATER THAN 50% OF THE PRIMARY UNIT SIZE. SEE SECTION 2.03.005 OF THE DISTRICT'S SEWER CODE FOR PARTICIPATION FEE REQUIREMENTS.
5. IF FOR ANY REASON, THE PROPERTY IS SUBSEQUENTLY DIVIDED, EACH BUILDING IS REQUIRED TO THEN BE SEPARATELY AND INDEPENDENTLY CONNECTED TO THE PUBLIC SEWER.
6. A RESIDENTIAL PUMP SYSTEM MAY BE USED IF GRAVITY FLOW CANNOT BE ACHIEVED. SEE STANDARD DRAWING D.

SOUTH PLACER MUNICIPAL UTILITY DISTRICT

TYPICAL ADU AND OUTDOOR KITCHEN LAYOUT

APPROVED BY:	REVISION DATE:	DRAWING:
DRAFT CARIE HUFF, P.E. DISTRICT ENGINEER	4/7/21	E

SECTION 8: STANDARD DETAIL DRAWINGS

8.01 Standard Detail Drawings

Drawing No.

1. Estimated Average Flow
2. Peaking Factors
3. Maximum Trench Width for Vitrified Clay Pipe
4. Pipe Bedding and Initial Backfill
5. Manholes
6. Shallow Pipe Manholes
7. Inside Drop Connection
8. Outside Drop Connection
9. 6” And 8” Flushing Branch
10. Building Sewer Lower Lateral Elevation
11. Building Sewer Lower Lateral Plan
12. Property Line Cleanout To Grade
13. Access Road Easement Right Turn
14. Access Road Easement Hammerhead Turn Around
15. Access Road Easement Intermediate Turn Around
16. Access Road Pipe Gate
17. Utility Crossing
18. Concrete Erosion Protection
19. Wastewater Pump Station Bypass Manifold
20. Signature Block and Standard Notes
21. Raised Manholes
22. Removable Bollard

DRAFT

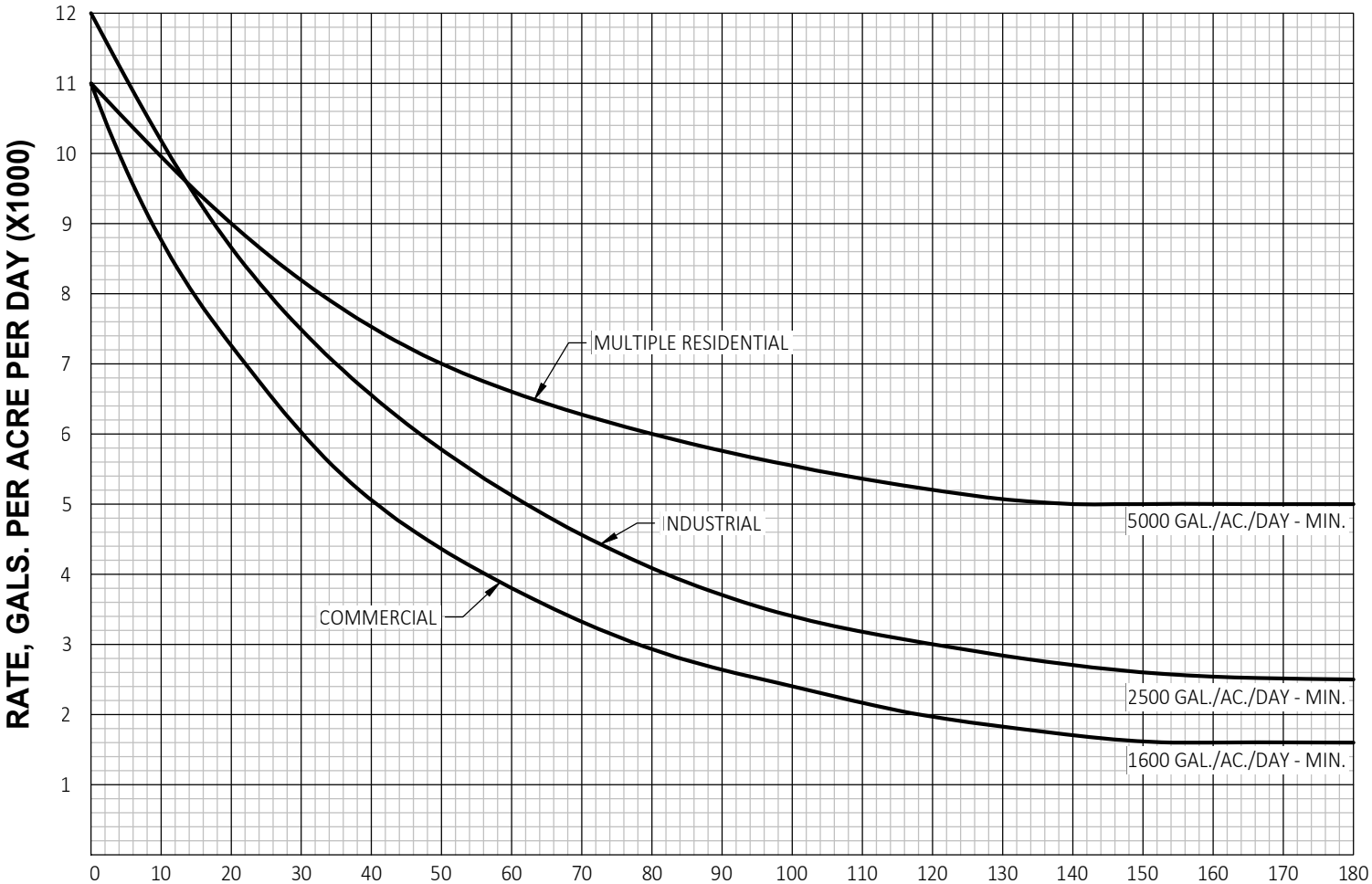

COMMERCIAL, INDUSTRIAL, AND MULTIPLE RESIDENTIAL ZONED AREAS

SOUTH PLACER MUNICIPAL UTILITY DISTRICT

ESTIMATED AVERAGE FLOW

APPROVED BY:	REVISION DATE:	DRAWING:
DRAFT CARIE HUFF, P.E. DISTRICT ENGINEER	4/7/21	1

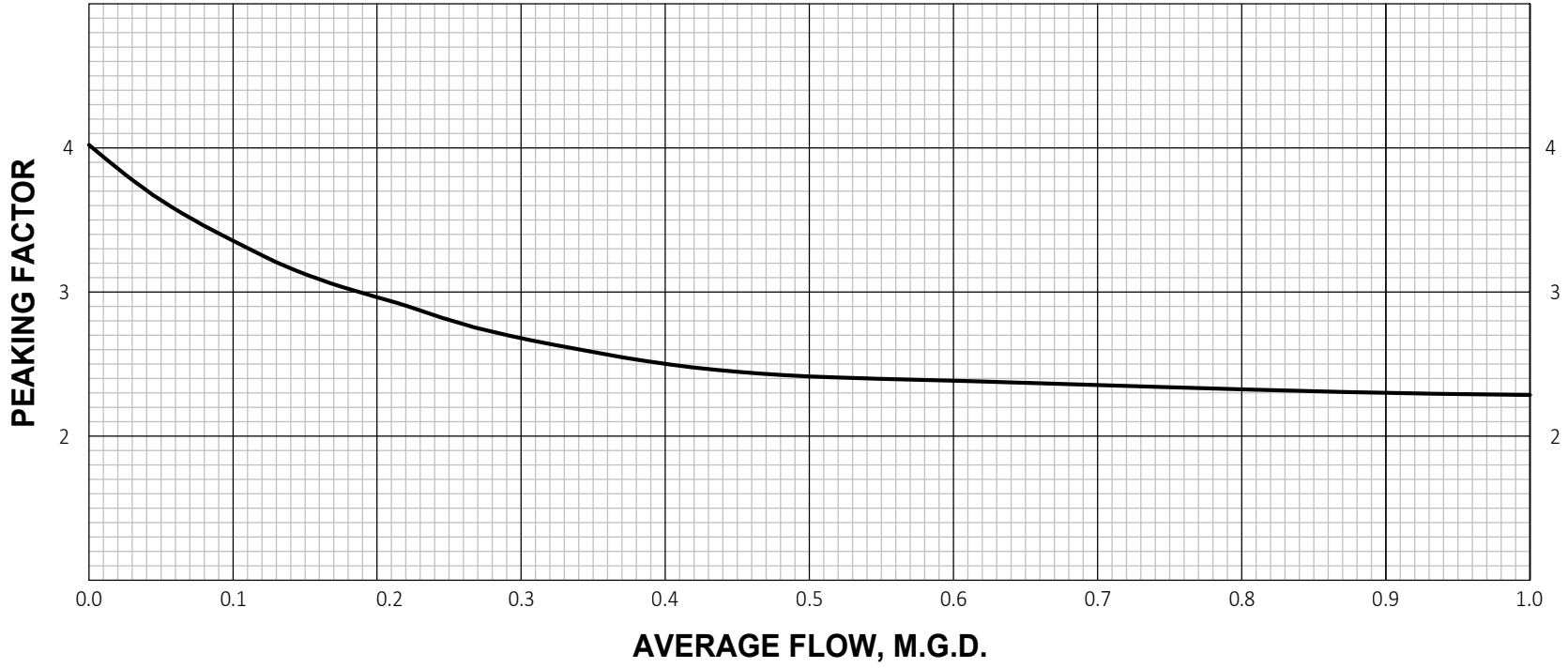

SOUTH PLACER MUNICIPAL UTILITY DISTRICT

PEAKING FACTORS

APPROVED BY:
DRAFT
CARIE HUFF, P.E.
DISTRICT ENGINEER

REVISION DATE: 4/7/21

DRAWING: 2

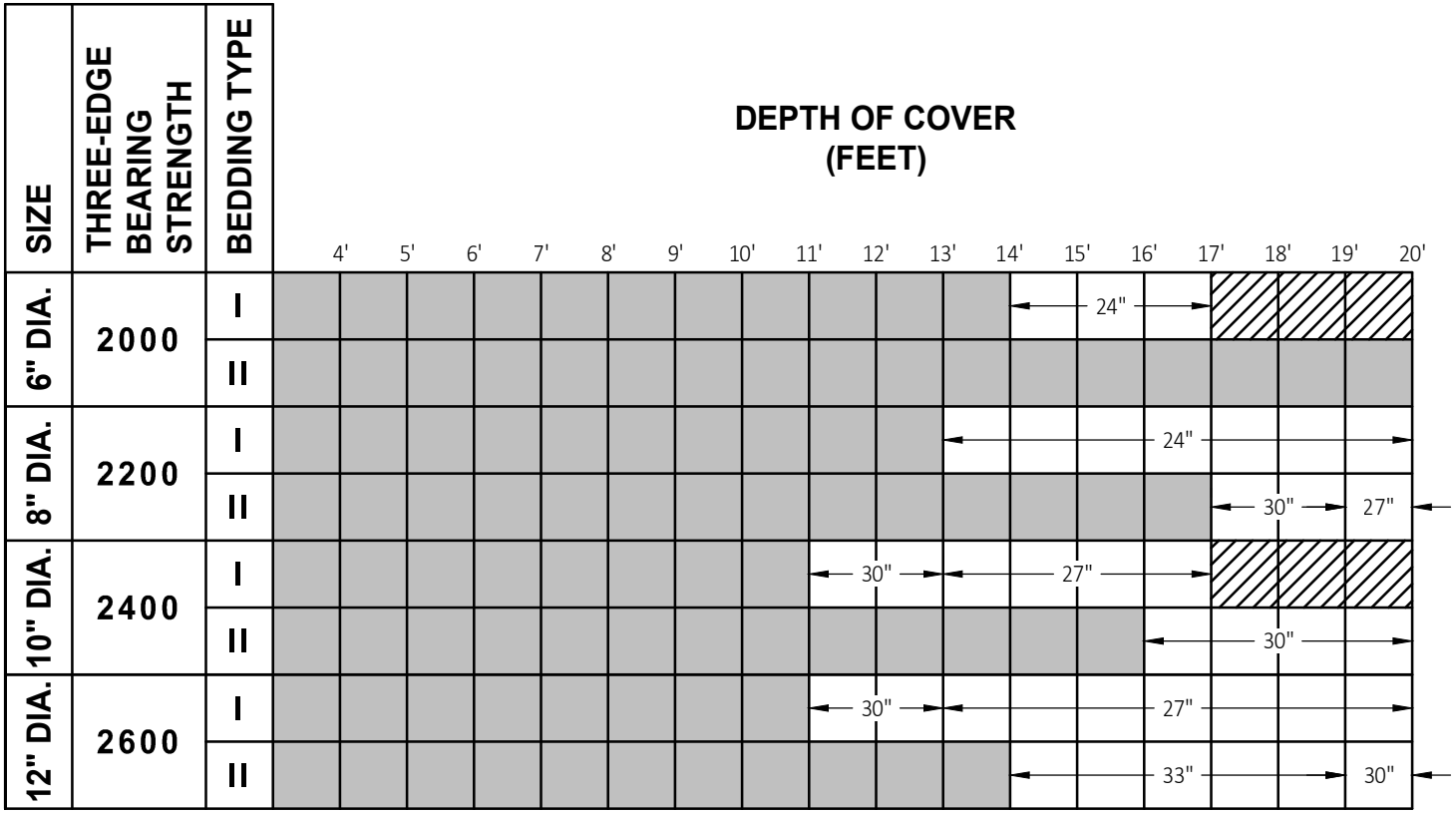

NO LIMIT ON TRENCH WIDTH - SEE SECTIONS 3.06 AND 5.08.

24" MAXIMUM TRENCH WIDTH MEASURED AT TOP OF PIPE

PIPE BEARING STRENGTH, BEDDING TYPE, AND DEPTH OF COVER NOT ACCEPTABLE

NOTES:

1. CALCULATIONS BASED ON SOIL WT. = 120 lb/ft^3, SATURATED CLAY Kμ= 0.110.
2. FOR DEPTHS LESS THAN 3 FEET OR MORE THAN 20 FEET SEE SECTIONS 3.06 - SPECIAL PIPE STRENGTH REQUIREMENTS.

SOUTH PLACER MUNICIPAL UTILITY DISTRICT

MAXIMUM TRENCH WIDTH FOR VITRIFIED CLAY PIPE

APPROVED BY:	REVISION DATE:	DRAWING:
DRAFT CARIE HUFF, P.E. DISTRICT ENGINEER	4/7/21	3

KEYNOTES:

1. CAREFULLY PLACED BACKFILL, NO SPECIAL COMPACTION REQUIRED.
2. IMPORTED MATERIAL, CRUSHED ROCK, 100% PASSING ¾-INCH SIEVE.
3. IMPORTED MATERIAL, CRUSHED ROCK, LESS THAN 10% PASSING 8 SIEVE, 100% PASSING ¾-INCH SIEVE.
4. CONCRETE - "2-SACK" MINIMUM, OR AS REQUIRED BY THE DISTRICT, AND WITH PIPE WRAP.
5. MINIMUM OF 4-INCHES OR ⅛ O.D. (WHICHEVER IS GREATER).
6. WARNING TAPE SHALL BE GREEN, 6-INCH WIDE, AND STATE "CAUTION: BURIED SEWER LINE BELOW." SEE SECTION 2.02.A.5 OF THESE SPECIFICATION.

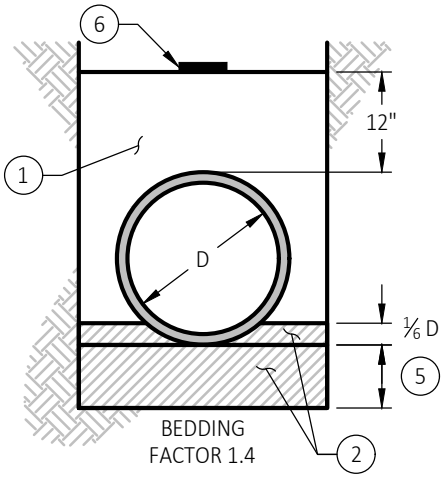

TYPE I

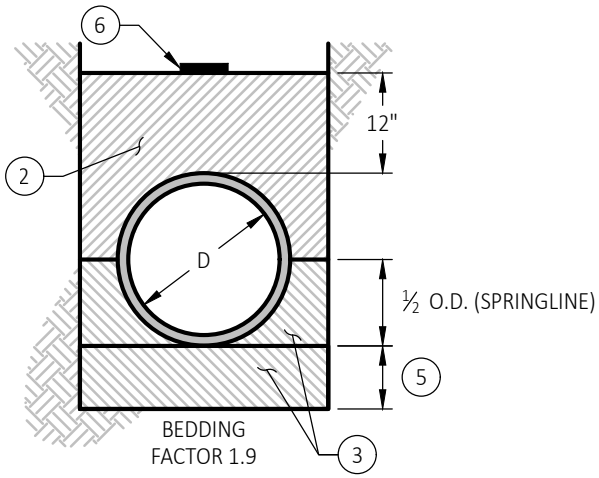

TYPE II

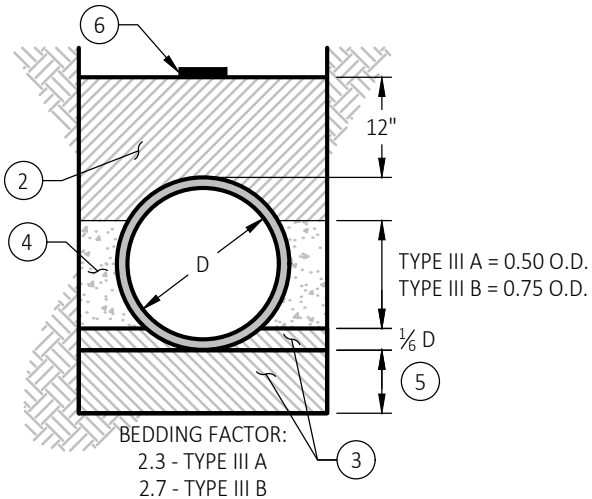

***TYPE III**

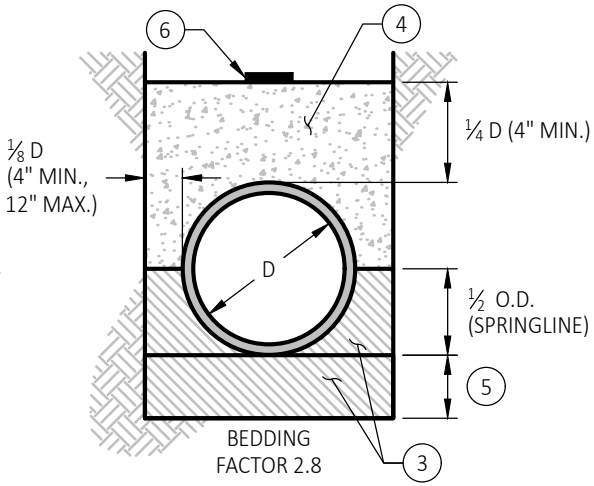

***TYPE IV**

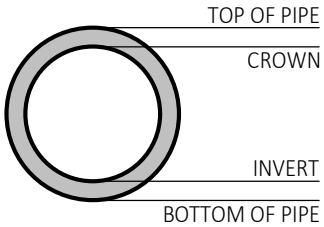

PIPE DEFINITIONS

NOTES:

1. *NOT PERMITTED WITHOUT SPECIFIC DISTRICT APPROVAL.
2. ALL DRAWINGS ARE NOT TO SCALE.
3. CONTROLLED LOW STRENGTH MATERIAL (CSLM) SHALL BE IN ACCORDANCE WITH SECTION X.X OF THESE SPECIFICATIONS AND USED AS BACKFILL AS APPROVED BY THE DISTRICT.

SOUTH PLACER MUNICIPAL UTILITY DISTRICT

PIPE BEDDING AND INITIAL BACKFILL

APPROVED BY:	REVISION DATE:	DRAWING:
DRAFT CARIE HUFF, P.E. DISTRICT ENGINEER	4/7/21	4

KEYNOTES:

1. PROVIDE FRAME AND COVER PER SECTION 2.13 OF THESE SPECIFICATIONS.
2. PLUG OR INSPECTION CLEANOUT OR FLUSHING BRANCH AS REQUIRED BY THESE SPECIFICATIONS.
3. SEWER STUB (LENGTH = AS PER PLANS OR ONE JOINT).
4. REPAIR COUPLING OR FLEXIBLE JOINT.
5. FORM PERIMETER BY USE OF AN "IMPRESSION" RING. NO BARRELS OR CONE SHALL BE PLACED UNTIL CONCRETE BASE HAS SET.
6. MANHOLE GRADE RINGS, 3-INCHES MINIMUM - 11-INCHES MAXIMUM.
7. 8-INCHES OF ¾-INCH CRUSHED ROCK.
8. MORTAR JOINT ON INSIDE OF MANHOLE.
9. PREFORMED PLASTIC SEALING COMPOUND.
10. SECURE JOINT WRAP TAPE ON OUTSIDE.

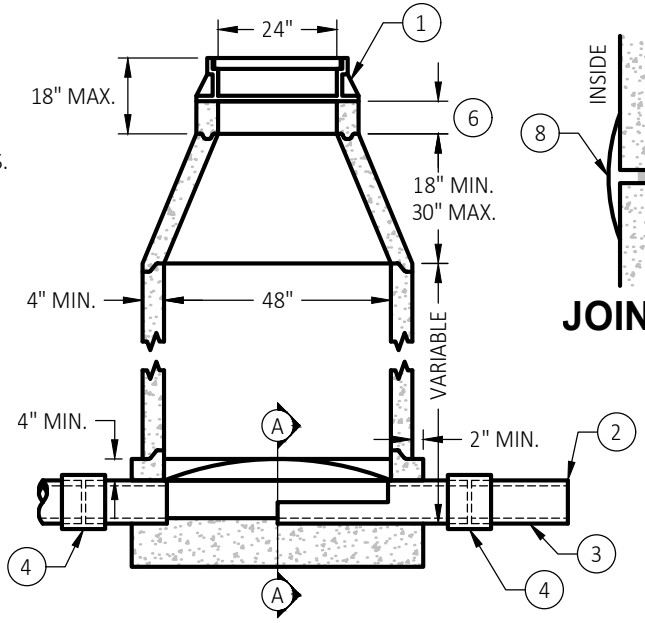

STANDARD 48" MANHOLE

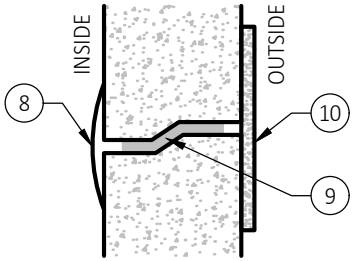

JOINT DETAIL

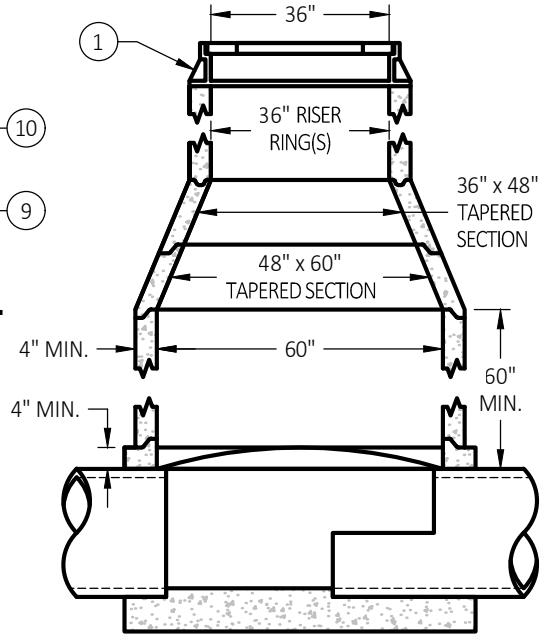

60" MANHOLE

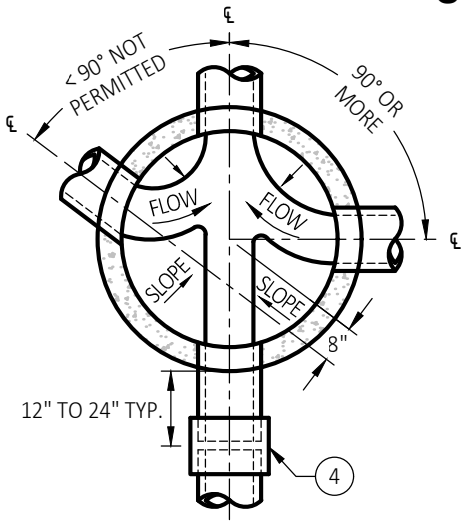

INTERSECTING
SEWER AT MANHOLE

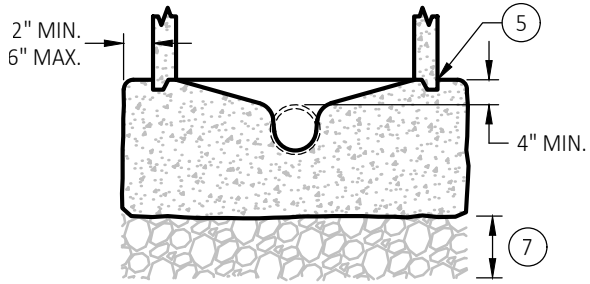

SECTION A-A
CAST-IN-PLACE BASE

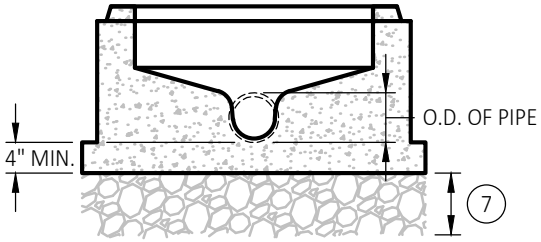

SECTION A-A
PRECAST BASE

NOTES:

1. ALL DRAWINGS ARE NOT TO SCALE.
2. SEE GENERAL MANHOLE NOTES ON STANDARD DRAWING NO. 6 - SHALLOW PIPE MANHOLE.

SOUTH PLACER
MUNICIPAL UTILITY DISTRICT

MANHOLES

APPROVED BY:	REVISION DATE:	DRAWING:
DRAFT CARIE HUFF, P.E. DISTRICT ENGINEER	4/7/21	5

KEYNOTES:

1. ADJUSTING RINGS AS REQUIRED.
2. CONCENTRIC CONE.
3. MORTAR SEAL AT JOINT, TYPICAL
4. CAST-IN-PLACE MANHOLE BASE (PRECAST MANHOLE BASE NOT SHOWN, SIMILAR).
5. REPAIR COUPLING OR FLEXIBLE JOINT AS APPROVED BY THE DISTRICT.
6. 6-INCHES MINIMUM - 12-INCHES MAXIMUM AS DIRECTED BY THE DISTRICT.
7. #4 REINFORCEMENT HOOPS.
8. EXTEND CONCRETE TO 2-INCHES BELOW JOINT.
9. AC SURFACE, 3-INCHES AC OVER 8-INCHES AB MINIMUM OR PER ROAD CONTROLLING ENTITY.
10. PROVIDE FRAME AND COVER PER SECTION 2.12 OF THESE SPECIFICATIONS.
11. WATER STOP.

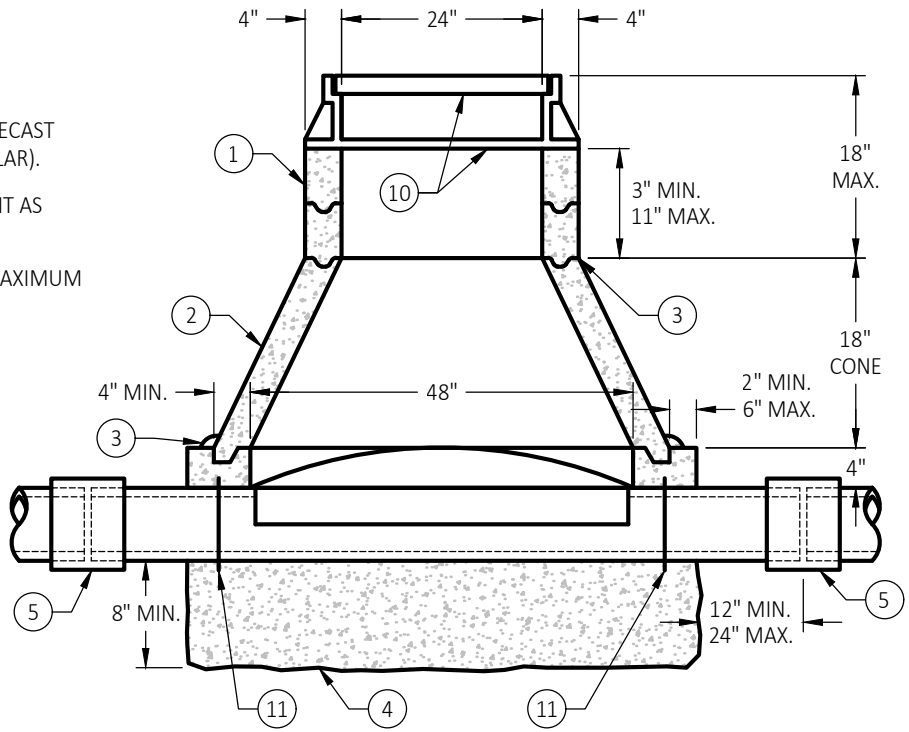

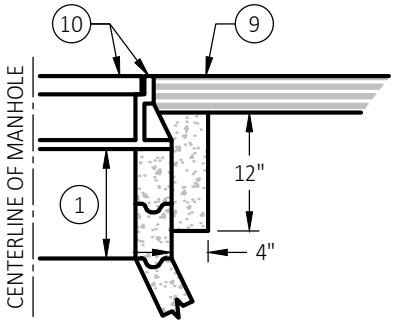

PAVED AREA

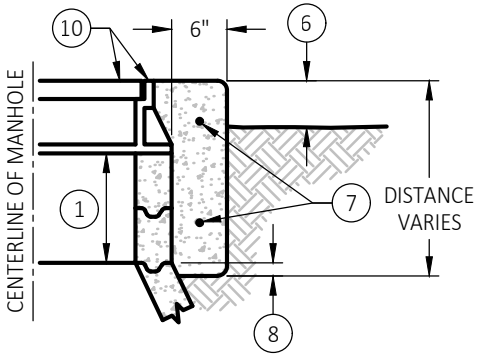

UNPAVED AREA

MANHOLE CONCRETE COLLAR

NOTES:

1. ALL DRAWINGS ARE NOT TO SCALE.
2. CLASS A CONCRETE SHALL BE USED FOR MANHOLES WHICH ARE GREATER THAN 10 FEET IN DEPTH.
3. CAST-IN-PLACE MANHOLE BASES SHALL BE SHAPED TO BE PERPENDICULAR TO THE PIPE. OVER-POURING OF CONCRETE WILL NOT BE ALLOWED. CONCRETE SHALL BE CONSOLIDATED IN A MANNER ACCEPTABLE TO THE DISTRICT. THE PERIMETER OF THE BASE SHALL BE FORMED BY THE USE OF AN "IMPRESSION" RING TO RECEIVE THE BARREL OR CONE.
4. PIPE MAY STOP AT THE INSIDE FACE OF THE MANHOLE OR MAY BE LAID CONTINUOUS THROUGH THE MANHOLE. IF LAID CONTINUOUS, THE TOP OF HALF OF THE PIPE SHALL BE BROKEN AWAY AFTER THE BASE IS POURED.
5. JOINTS SHALL BE TONGUE AND GROOVE AND SEALED WITH APPROVED PLASTIC SEALING COMPOUND. MORTAR SHALL BE PLACED ON ALL INSIDE JOINTS, AND THE OUTSIDE JOINT OF THE MANHOLE SHALL BE SEALED WITH APPROVED JOINT WRAP TAPE.
6. MANHOLE FRAME SHALL HAVE 24-INCHES INSIDE DIAMETER OPENING AND COVER SHALL BE 26-INCHES DIAMETER. PROVIDE FOUR HOLES AT 1 ½ - 2-INCHES IN DIAMETER AT 90 DEGREES IN THE LOWER LIP OF COVER FRAME.
7. MANHOLES SHALL BE VACUUM TESTED FOR LEAKAGE AS SPECIFIED IN SECTION 5.34, ACCEPTANCE TEST.

SOUTH PLACER MUNICIPAL UTILITY DISTRICT

SHALLOW PIPE MANHOLE

APPROVED BY:	REVISION DATE:	DRAWING:
DRAFT CARIE HUFF, P.E. DISTRICT ENGINEER	4/7/21	6

KEYNOTES:

1. INSIDE DROP BOWL SECURED WITH FOUR (4) STAINLESS STEEL BOLTS.
2. CAULDER COUPLING OR APPROVED EQUAL.
3. STAINLESS STEEL CLAMPS AT 3-FOOT INTERVALS WITH ⅜-INCH X 3 ¾-INCHES STAINLESS STEEL BOLTS AND EPOXY PASTE.
4. 90° ELBOW EMBEDDED IN CONCRETE AT 45° WITH SEWER FLOW.
5. MANHOLE BARREL
6. SMOOTH BORE CUT AND FLEXIBLE CONNECTOR MINIMUM 6-INCHES FROM BARREL JOINT.
7. 12-INCH LENGTH OF PIPE.
8. FOUR BAND SHIELDED REPAIR COUPLING.
9. MANHOLE CONE

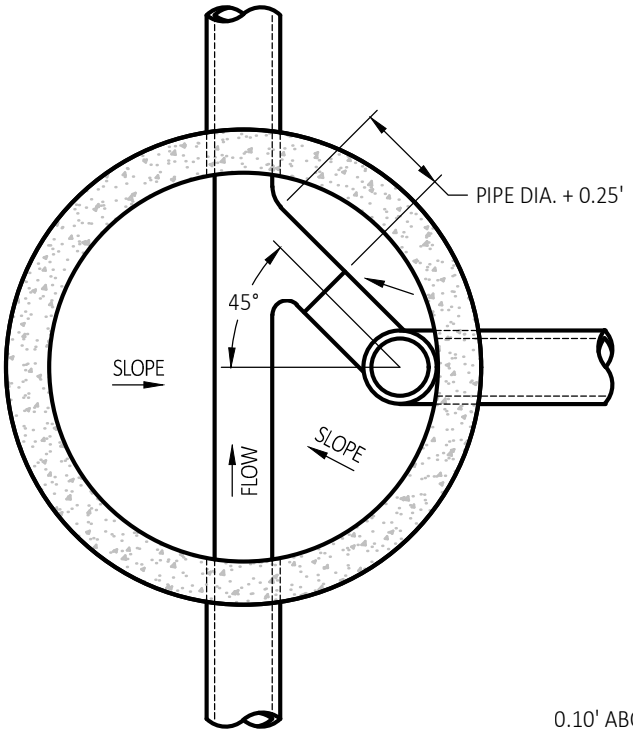

PLAN

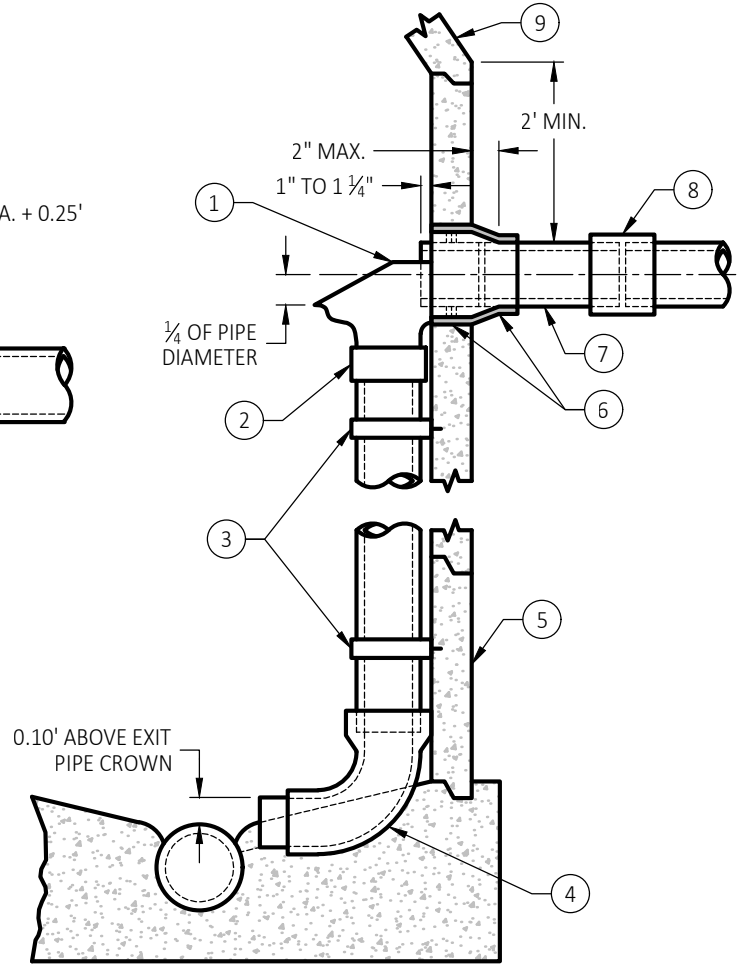

ELEVATION

NOTES:

1. ALL DRAWINGS ARE NOT TO SCALE.
2. OUTSIDE DROP CONNECTIONS ARE ONLY AS APPROVED BY THE DISTRICT.
3. ALL INSIDE DROP PIPING SHALL BE PVC SDR-26.
4. PRIME AND CEMENT ALL JOINTS AS RECOMMENDED BY THE MANUFACTURER.
5. DROP CONNECTION PIPE AND FITTINGS TO BE THE SAME SIZE AS THE ENTERING PIPE.
6. INSIDE DROP CONNECTION MINIMUM DISTANCES:
   - 6.A. 6-INCH AND 8-INCH PIPE = 48-INCHES MINIMUM DROP, UNLESS OTHERWISE APPROVED BY THE DISTRICT.
   - 6.B. 10-INCHES AND LARGER PIPE = DROP CONNECTION NOT ALLOWED UNLESS SPECIFICALLY APPROVED BY THE DISTRICT.
   - 6.C. 4-INCH LOWER LATERAL CONNECTIONS = 48-INCHES MINIMUM FOR OUTSIDE DROP OR 12-INCHES MINIMUM FOR INSIDE DROP, UNLESS OTHERWISE APPROVED BY THE DISTRICT.
7. FLEXIBLE CONNECTOR SHALL BE "KOR-N-SEAL 1", "PRESS-BOOT", OR EQUAL.
8. REFER TO SECTIONS 3.08 AND 5.24 FOR PERMISSIBLE DROP CONNECTION SITUATIONS.
9. ALL INSIDE DROP CONNECTIONS FOR LOWER LATERALS AND COLLECTOR SEWERS SHALL USE THE DROP BOWL AS PRODUCED BY RELINER-DURAN, INC. (53 MT. ARCHER RD., LYME, CT 06317) OR APPROVED EQUAL.

SOUTH PLACER MUNICIPAL UTILITY DISTRICT

INSIDE DROP CONNECTION

APPROVED BY:	REVISION DATE:	DRAWING:
DRAFT CARIE HUFF, P.E. DISTRICT ENGINEER	4/7/21	7

KEYNOTES:

1. ENCASEMENT CONCRETE SHALL BE POURED AGAINST UNDISTURBED EARTH.
2. ¾-INCH CRUSHED ROCK BACKFILL MATERIAL
3. 45° BEND.
4. MANHOLE BARREL
5. SMOOTH BORE CUT AND FLEXIBLE CONNECTOR MINIMUM 6-INCHES FROM BARREL JOINT.
6. 90° BEND
7. REVERSE WYE
8. BEDDING PER STANDARD DRAWING NO. 4.
9. COLLECTOR SEWER.

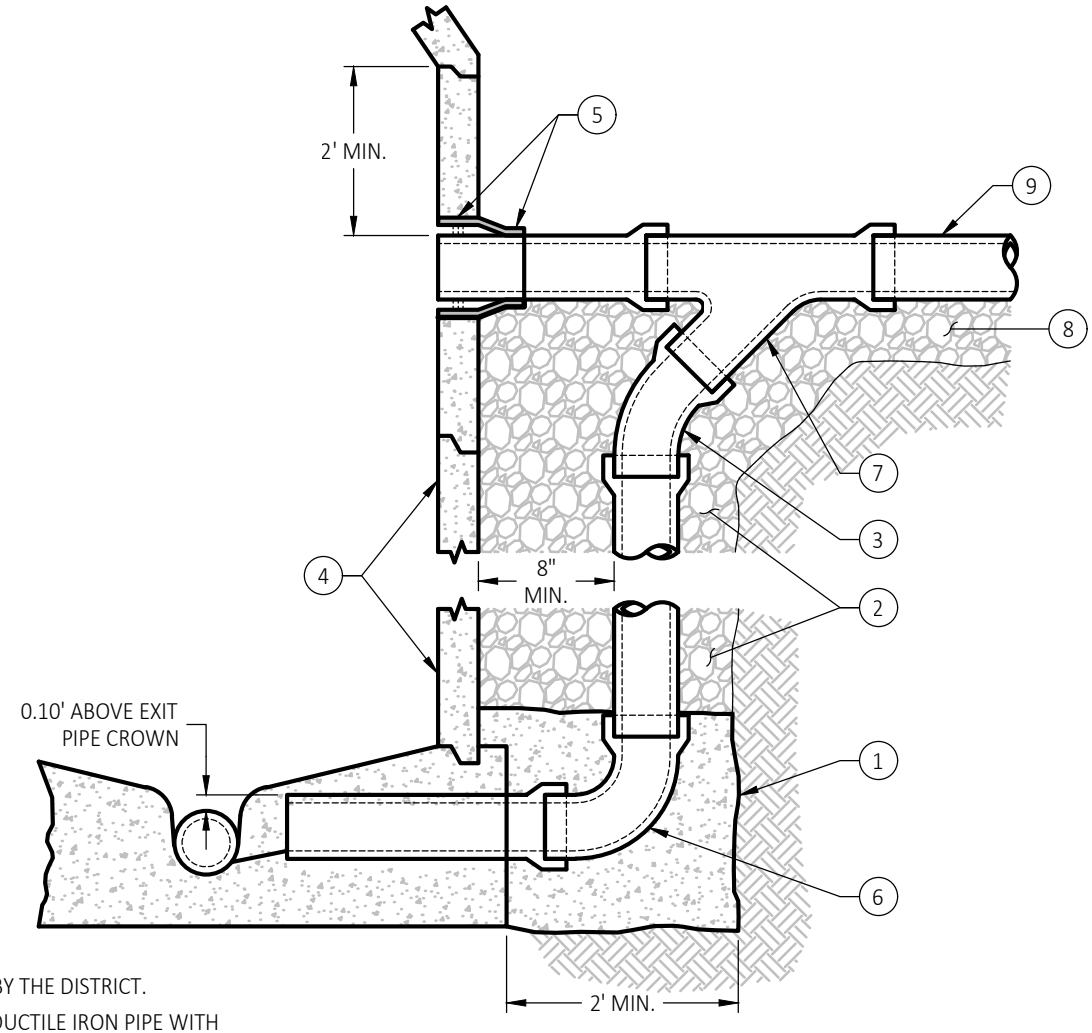

NOTES:

1. ALL DRAWINGS ARE NOT TO SCALE.
2. OUTSIDE DROP CONNECTIONS ARE ONLY AS APPROVED BY THE DISTRICT.
3. OUTSIDE DROP CONNECTION PIPE AND FITTINGS TO BE DUCTILE IRON PIPE WITH APPROVED LINING, OR PVC SDR-26 PIPE.
4. OUTSIDE DROP CONNECTION MINIMUM DISTANCES:
   - 4.A. 6-INCH AND 8-INCH PIPE = 48-INCHES MINIMUM DROP, UNLESS OTHERWISE APPROVED BY THE DISTRICT.
   - 4.B. 10-INCHES AND LARGER PIPE = DROP CONNECTION NOT ALLOWED UNLESS SPECIFICALLY APPROVED BY THE DISTRICT.
   - 4.C. 4-INCH LOWER LATERAL CONNECTIONS = 48-INCHES MINIMUM FOR OUTSIDE DROP OR 12-INCHES MINIMUM FOR INSIDE DROP, UNLESS OTHERWISE APPROVED BY THE DISTRICT.
5. FLEXIBLE CONNECTOR SHALL BE "KOR-N-SEAL 1", "PRESS-BOOT", OR EQUAL.
6. REFER TO SECTIONS 3.08 AND 5.24 FOR PERMISSIBLE DROP CONNECTION SITUATIONS.

SOUTH PLACER MUNICIPAL UTILITY DISTRICT

OUTSIDE DROP CONNECTION

APPROVED BY:	REVISION DATE:	DRAWING:
DRAFT CARIE HUFF, P.E. DISTRICT ENGINEER	4/7/21	8

KEYNOTES:

1. TRAFFIC FRAME AND COVER "D&L SUPPLY" #4-8024 SERIES OR EQUAL (WITH LID MARKED "S" OR "SEWER").
2. FLUSH WITH EXISTING PAVING OR SIDEWALK OR 1-INCH ABOVE SURROUNDING GROUND SURFACE.
3. CONCRETE (SQUARE OR CIRCULAR).
4. CAP SHALL BE NON-CORROSIVE. CHERNE INDUSTRIES "END OF PIPE GRIPPER PLUG", MODEL 270245, OR APPROVED EQUAL, INSIDE WING-NUT TWIST PLUG.
5. 90% COMPACTED BACKFILL MATERIAL, SEE STANDARD DRAWING NO. 4.
6. BACKFILL MATERIAL, SEE STANDARD DRAWING NO. 4.
7. PAVING SURFACE AND BASE ROCK, SEE STANDARD DRAWING NO. 4.
8. LONG RADIUS 90° BEND OR TWO (2) 45° BENDS, AS APPROVED BY THE DISTRICT.
9. NO. 4 REINFORCEMENT HOOP.
10. COLLECTOR SEWER.

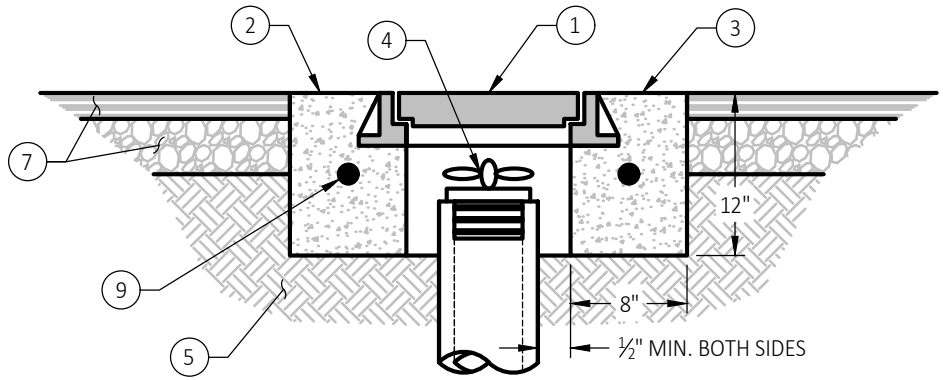

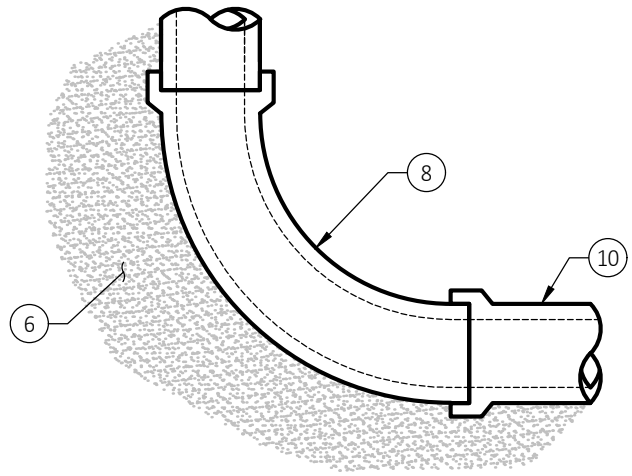

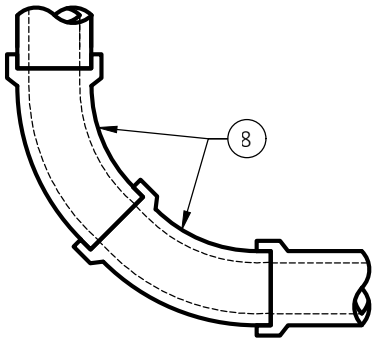

TWO 45° BEND ALTERNATIVE

NOTES:

1. ALL DRAWINGS ARE NOT TO SCALE.
2. FLUSHING BRANCH PIPE AND FITTINGS SHALL BE THE SAME SIZE AND MATERIAL AS THE HORIZONTAL PIPE TO WHICH IT CONNECTS. JOINT SHALL BE AS SPECIFIED FOR THE TYPE OF PIPE USED.

SOUTH PLACER MUNICIPAL UTILITY DISTRICT

6-INCH AND 8-INCH FLUSHING BRANCH

APPROVED BY:	REVISION DATE:	DRAWING:
DRAFT CARIE HUFF, P.E. DISTRICT ENGINEER	4/7/21	9

KEYNOTES:

1. INSPECTION CLEANOUT WITH TOP 18-INCHES ABOVE GROUND AND PAINTED GREEN, SEE DRAWING NO. 11.
2. LONG RADIUS BEND.
3. COLLECTOR SEWER, SEE NOTE 3.

KEYNOTES CONTINUED:

4. "S" IN FACE OF CURB TO IDENTIFY SERVICE SEWER (2-INCH x 2-INCH).
5. UNDISTURBED EARTH.
6. WYE.

KEYNOTES CONTINUED:

7. 45° BEND.
8. PROPERTY LINE CLEANOUT IN BOX SET FLUSH TO SURFACE, SEE DRAWING NO. 12.

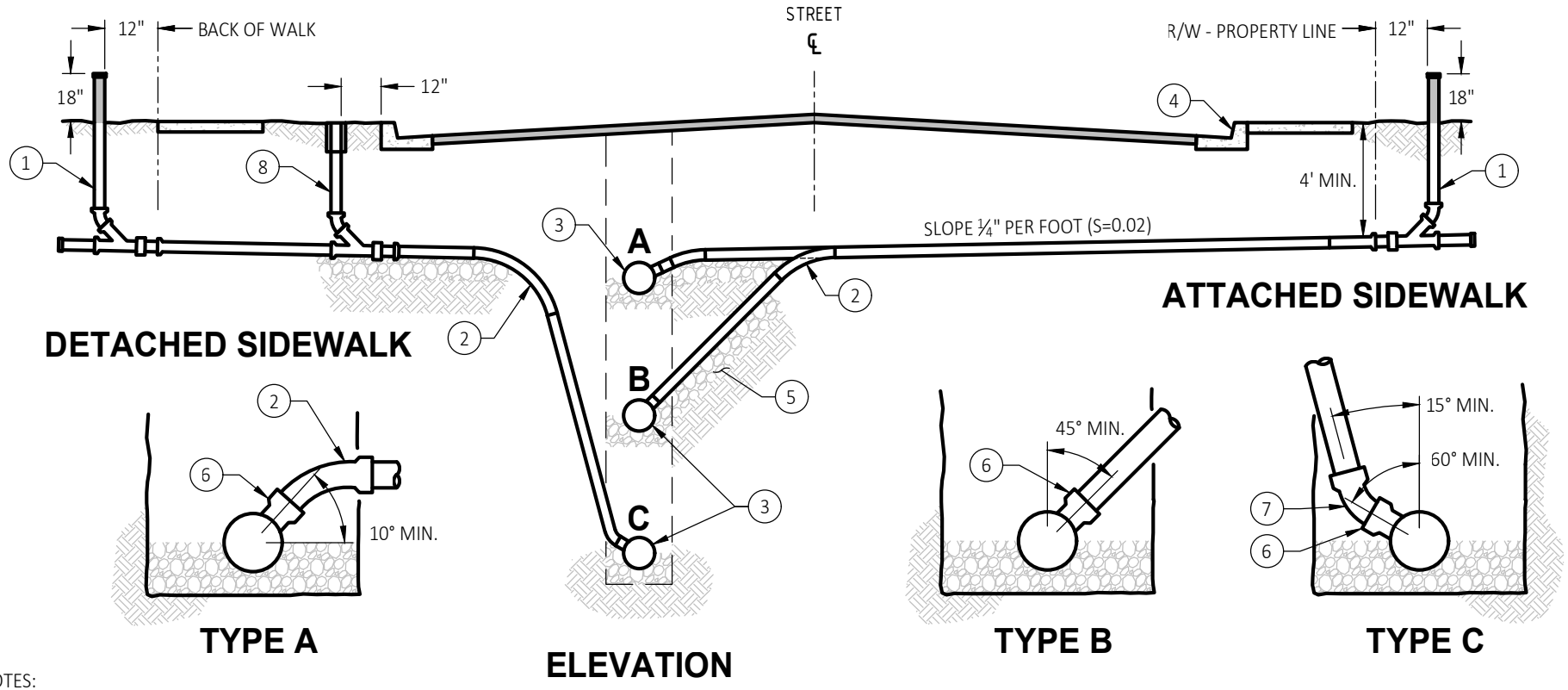

NOTES:

1. ALL DRAWINGS ARE NOT TO SCALE.
2. LOWER LATERALS SHALL HAVE THE SAME BEDDING AND BACKFILL AS THE COLLECTOR SEWER.
3. CONTRACTOR SHALL USE THE MOST APPROPRIATE CONNECTION (A, B, C) FOR THE PARTICULAR SITUATION ENCOUNTERED.
4. PLACE WELL COMPACTED BEDDING MATERIAL 18-INCHES WIDE UNDER THE WYE BRANCH, THE FITTING, AND UNSUPPORTED PIPE.
5. ALL LOWER LATERALS PIPE AND FITTINGS SHALL BE THE SAME MATERIAL AS THE COLLECTOR SEWER, UNLESS OTHERWISE PERMITTED BY THE DISTRICT.
6. THE INSPECTION CLEANOUT IS FOR THE PURPOSE OF TESTING/INSPECTING THE LOWER LATERAL, AND FOR THE SERVING TO LOCATE THE END OF THE LOWERS LATERAL STUB.

SOUTH PLACER MUNICIPAL UTILITY DISTRICT

BUILDING SEWER LOWER LATERAL ELEVATION

APPROVED BY:	REVISION DATE:	DRAWING:
DRAFT CARIE HUFF, P.E. DISTRICT ENGINEER	4/7/21	10

KEYNOTES:

1. INSPECTION CLEANOUT (TYPICAL).
2. LOWER LATERAL.
3. REPAIR COUPLING OR FLEXIBLE JOINT.
4. COLLECTOR SEWER.
5. SEWER MANHOLE, SEE DRAWING NO. 5.
6. WYE
7. 3 FEET LONG ABS TAIL WITH ABS GLUE CAP.
8. 45° BEND.
9. ABS RISER WITH ABS GLUE CAP. TOP 18-INCHES ABOVE GROUND AND PAINTED GREEN.
10. PIPE BEDDING, SEE DRAWING NO. 4.
11. PLAIN END x PLAIN END PUP OF PIPE.

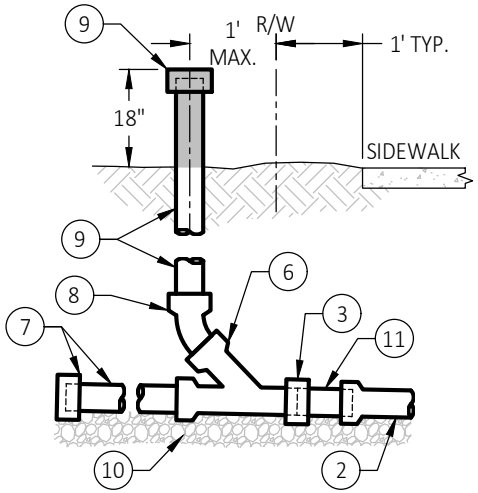

INSPECTION CLEANOUT

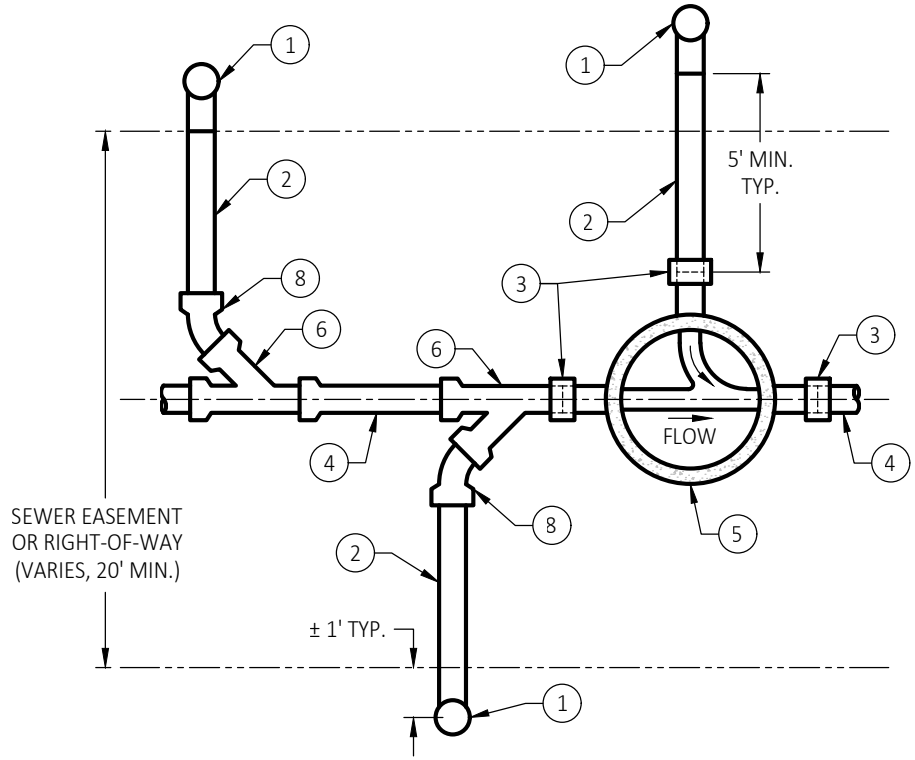

PLAN VIEW

NOTES:

1. ALL DRAWINGS ARE NOT TO SCALE.
2. SEE STANDARD DRAWING NO. 10 - BUILDING SEWER LOWER LATERAL (ELEVATION) FOR LATERAL DETAILS.

SOUTH PLACER MUNICIPAL UTILITY DISTRICT

BUILDING SEWER LOWER LATERAL PLAN

APPROVED BY:	REVISION DATE:	DRAWING:
DRAFT CARIE HUFF, P.E. DISTRICT ENGINEER	4/7/21	11

KEYNOTES:

1. F-8 CHRISTY (OR APPROVED EQUAL) CONCRETE VALVE BOX WITH CAST IRON LID MARKED "S" OR "SEWER," INSTALLED BY BUILDING CONTRACTOR.
2. 4-INCHES x 18-INCHES x 18-INCHES CONCRETE PAD IN REMOTE LOCATIONS AS DIRECTED.
3. ¾-INCH C RUSHED A.B. BEDDING MATERIAL EXTEND 1-FOOT BEYOND WYE (BOTH DIRECTIONS).
4. FOUR BAND SHIELDED REPAIR COUPLING AT MATERIAL TRANSITIONS AS APPROVED BY THE DISTRICT.
5. BACKFILL MATERIAL, SEE STANDARD DRAWING NO. 4.
6. WYE 45° WITH LONG RADIUS 45° BEND.
7. BUILDING SEWER LOWER LATERAL.
8. BUILDING SEWER UPPER LATERAL.
9. CAP SHALL BE NON-CORROSIVE. CHERNE INDUSTRIES "END OF PIPE GRIPPER PLUG", MODEL 270245, OR APPROVED EQUAL, INSIDE WING-NUT TWIST PLUG.
10. GLUE JOINT.

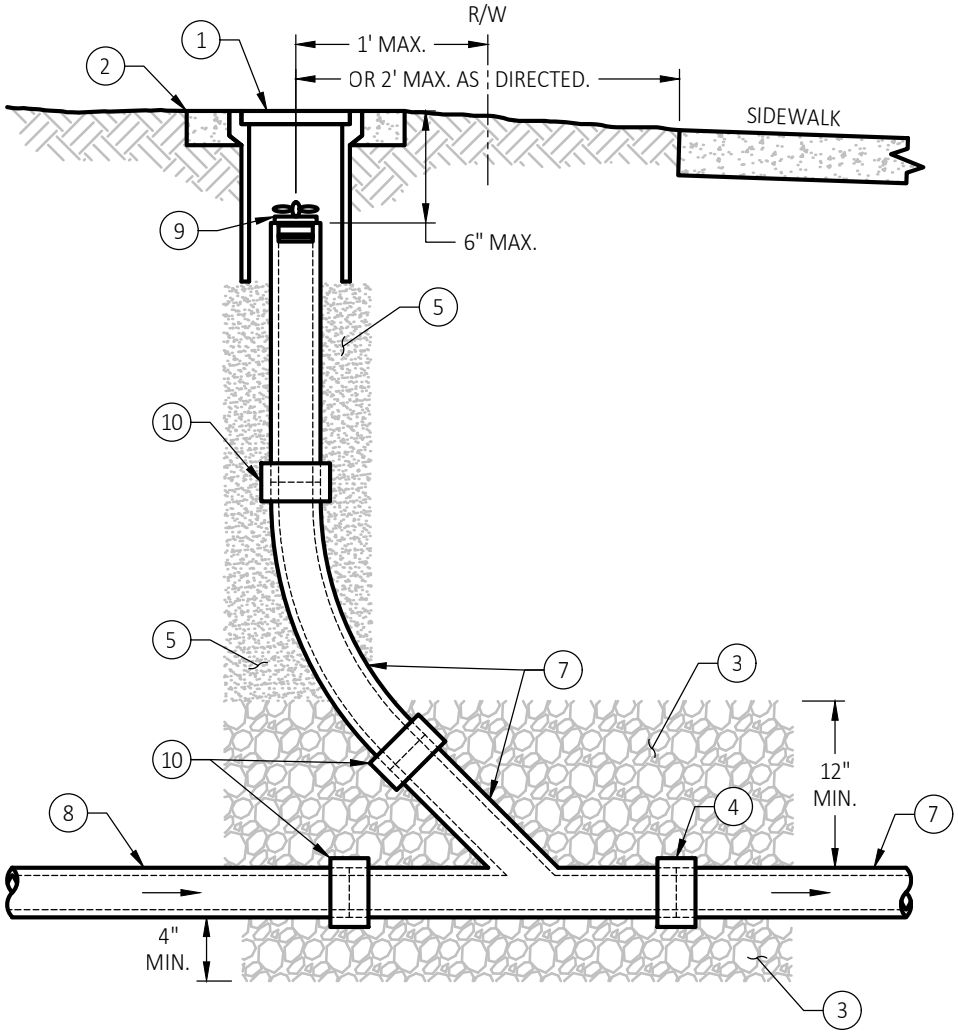

NOTES:

1. ALL DRAWINGS ARE NOT TO SCALE.
2. ALL CLEANOUT PIPE AND FITTINGS SHALL BE THE SAME SIZE AS THE LOWER LATERAL TO WHICH IT CONNECTS, UNLESS OTHERWISE DIRECTED BY THE DISTRICT. MATERIALS TO CONFORM TO SECTION 7.06 OF THESE SPECIFICATIONS
3. STACK SHALL BE STRAIGHT AND VERTICAL (PLUMB).

SOUTH PLACER MUNICIPAL UTILITY DISTRICT

PROPERTY LINE CLEANOUT TO GRADE

APPROVED BY:	REVISION DATE:	DRAWING:
DRAFT CARIE HUFF, P.E. DISTRICT ENGINEER	4/7/21	12

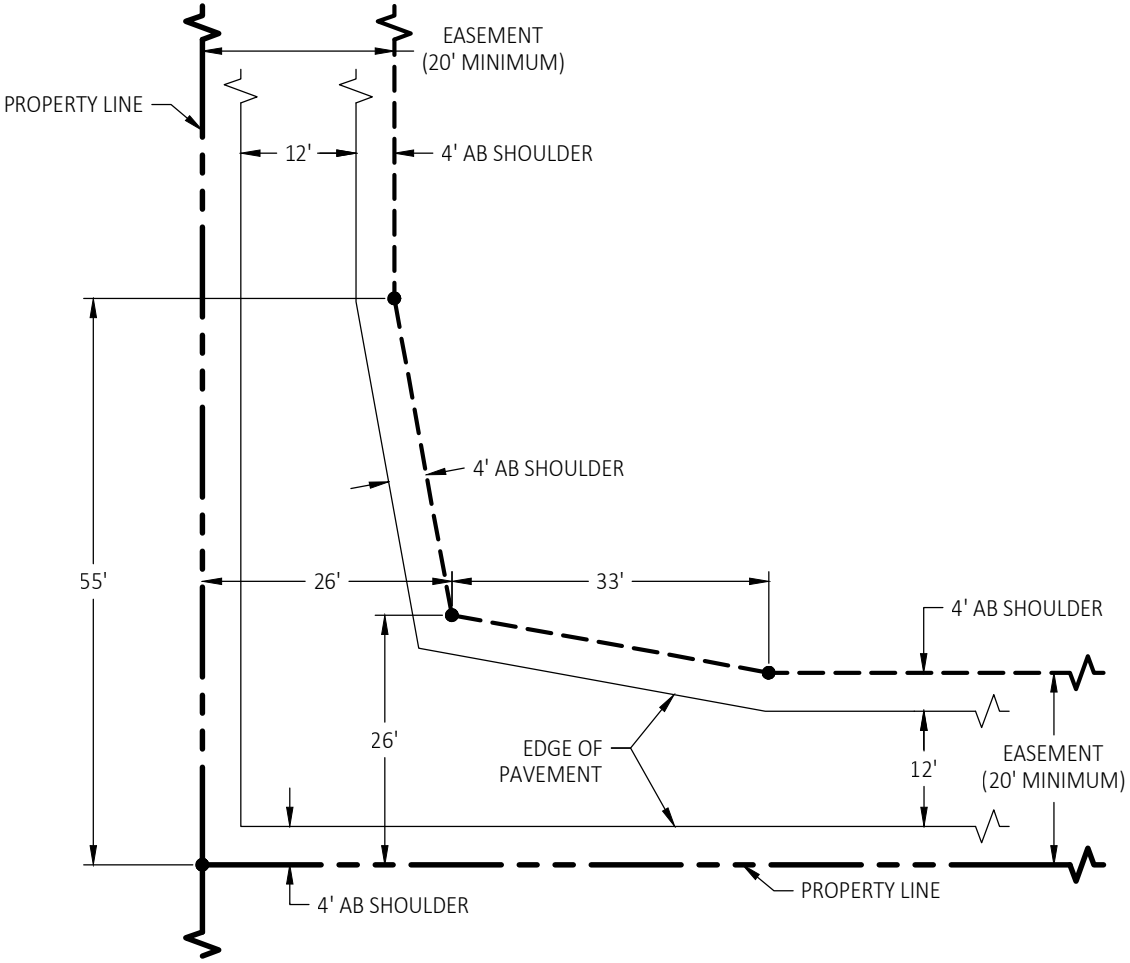

NOTES:

1. ALL DRAWINGS ARE NOT TO SCALE.
2. GENERAL WIDTH: 12-FEET TRAVELED WAY (MINIMUM), WITH 4-FEET SHOULDERS EACH SIDE, WIDEN THROUGH TURNS TO DIMENSIONS SHOWN.
3. SURFACING/SECTION: 3-INCHES OF ASPHALT CONCRETE (AC) OVER 8-INCHES OF COMPACTED AGGREGATE BASE (AB), OR AS REQUIRED BY THE DISTRICT.

SOUTH PLACER
MUNICIPAL UTILITY DISTRICT

ACCESS ROAD EASEMENT RIGHT TURN

APPROVED BY:	REVISION DATE:	DRAWING:
DRAFT CARIE HUFF, P.E. DISTRICT ENGINEER	4/7/21	13

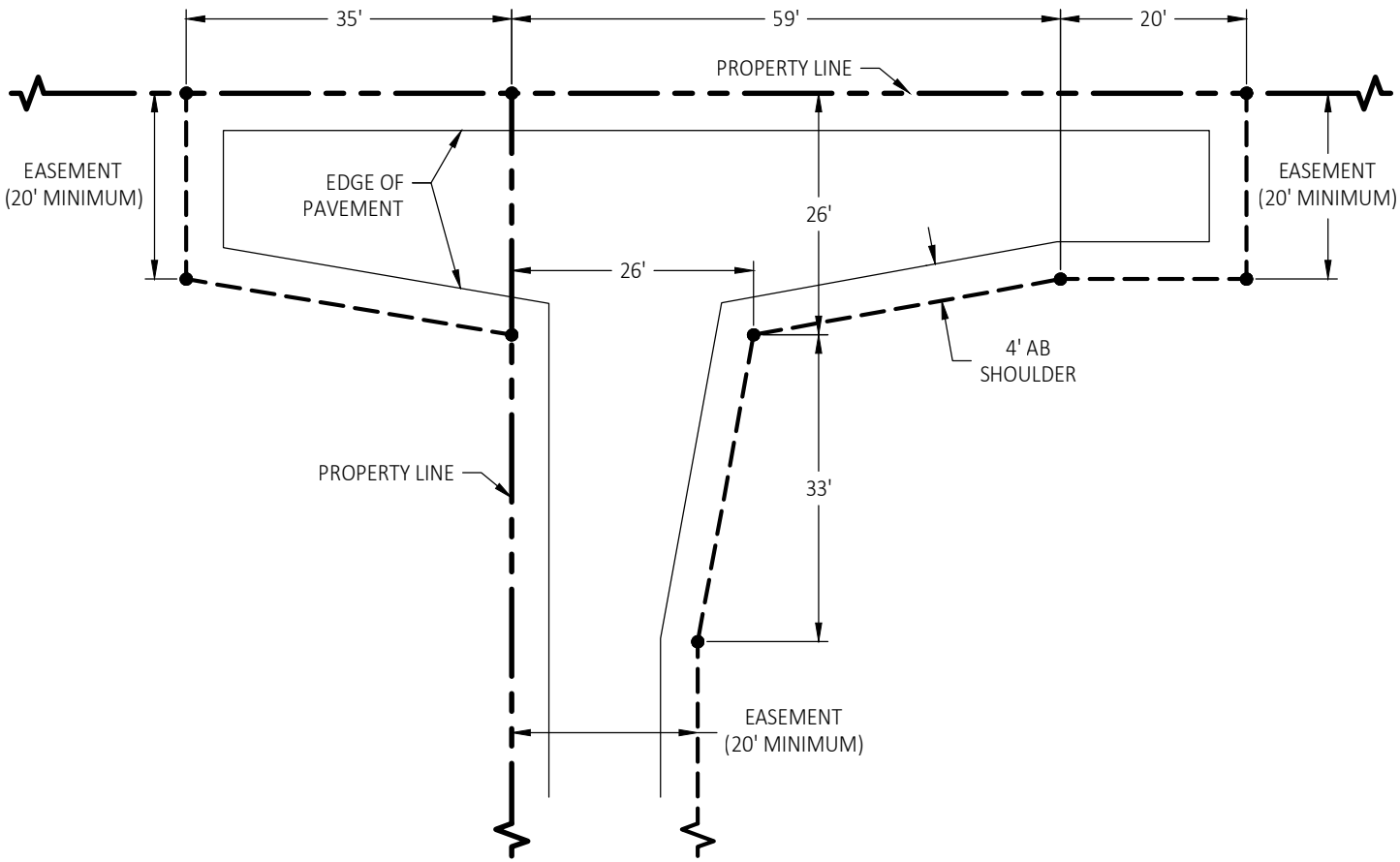

NOTES:

1. ALL DRAWINGS ARE NOT TO SCALE.
2. GENERAL WIDTH: 12-FEET TRAVELED WAY (MINIMUM), WITH 4-FEET SHOULDERS EACH SIDE, WIDEN THROUGH TURNS TO DIMENSIONS SHOWN.
3. SURFACING/SECTION: 3-INCHES OF ASPHALT CONCRETE (AC) OVER 8-INCHES OF COMPACTED AGGREGATE BASE (AB), OR AS REQUIRED BY THE DISTRICT.

SOUTH PLACER
MUNICIPAL UTILITY DISTRICT

ACCESS ROAD EASEMENT HAMMERHEAD TURNAROUND

APPROVED BY:	REVISION DATE:	DRAWING:
DRAFT CARIE HUFF, P.E. DISTRICT ENGINEER	4/7/21	14

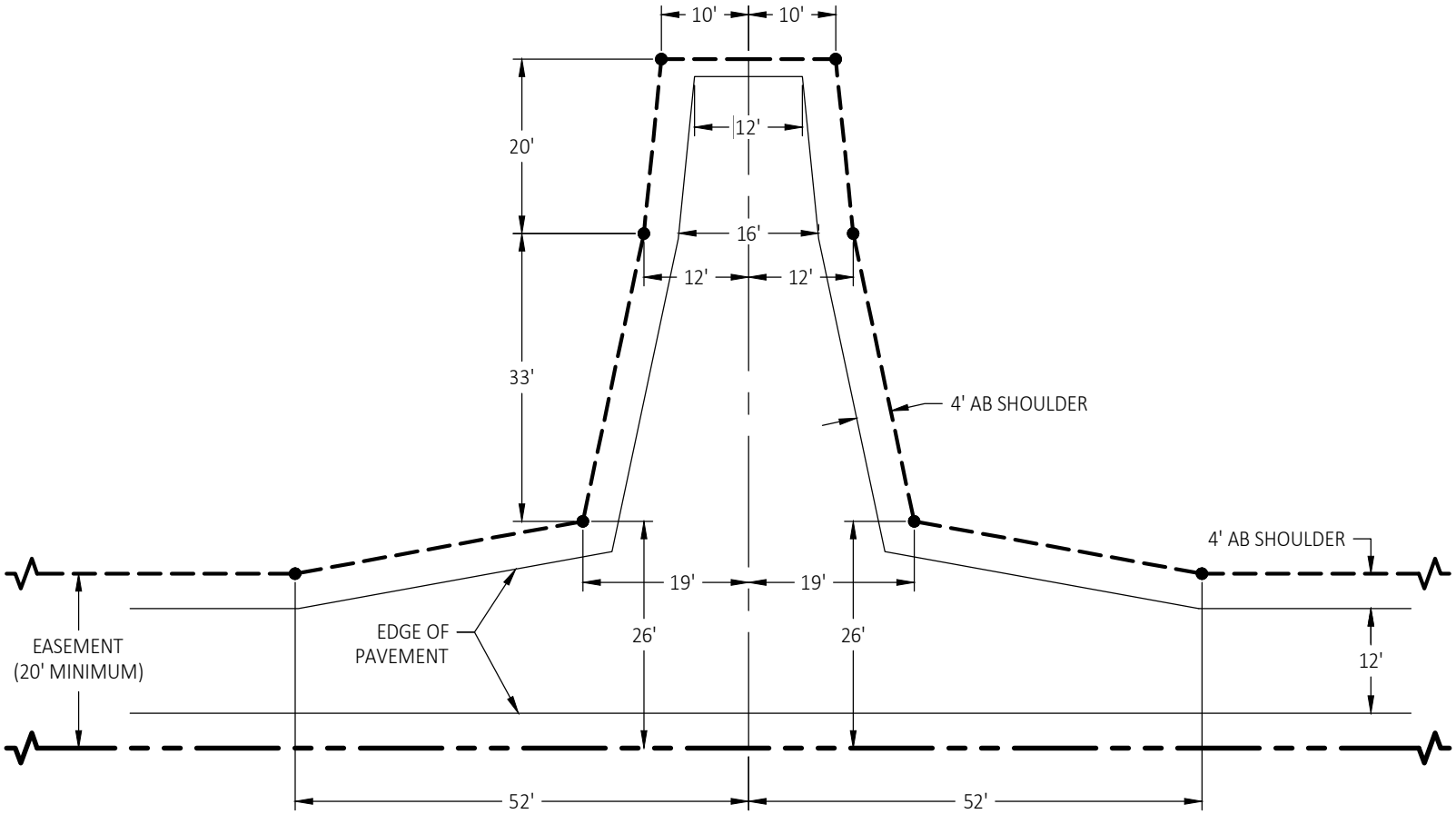

NOTES:

1. ALL DRAWINGS ARE NOT TO SCALE.
2. GENERAL WIDTH: 12-FEET TRAVELED WAY (MINIMUM), WITH 4-FEET SHOULDERS EACH SIDE, WIDEN THROUGH TURNS TO DIMENSIONS SHOWN.
3. SURFACING/SECTION: 3-INCHES OF ASPHALT CONCRETE (AC) OVER 8-INCHES OF COMPACTED AGGREGATE BASE (AB), OR AS REQUIRED BY THE DISTRICT.

SOUTH PLACER
MUNICIPAL UTILITY DISTRICT

ACCESS ROAD EASEMENT INTERMEDIATE TURNAROUND

APPROVED BY:	REVISION DATE:	DRAWING:
DRAFT CARIE HUFF, P.E. DISTRICT ENGINEER	4/7/21	15

KEYNOTES:

1. ½-INCH STEEL PLATE
2. PIPE CAP
3. ½-INCH REBAR LOOP 2-INCH DIA. FOR CHAIN TACK WELD FOR BREAKAWAY.
4. 1-INCH DIA. STEEL PIN THRU STEEL PLATE FOR PIVOT.
5. 5-INCH O.D. GALVANIZED STEEL PIPE
6. 2 - ⅞-INCH O.D. STEEL PIPE
7. 3 - ½-INCH O.D. STEEL PIPE
8. HALF OF 5-INCH O.D. STEEL PIPE WELDED TO POST.
9. ½-INCH STEEL BOLT TYPICAL (LENGTH AS REQUIRED)
10. ⅛-INCH THICK x 6-INCH STEEL PLATES WELDED TO GATE FOR SIGNS.
11. 18-INCH DIA. X 24-INCH DEEP CONCRETE FOOTING
12. BARRICADE MARKER TYPE 1 (TYPICAL)

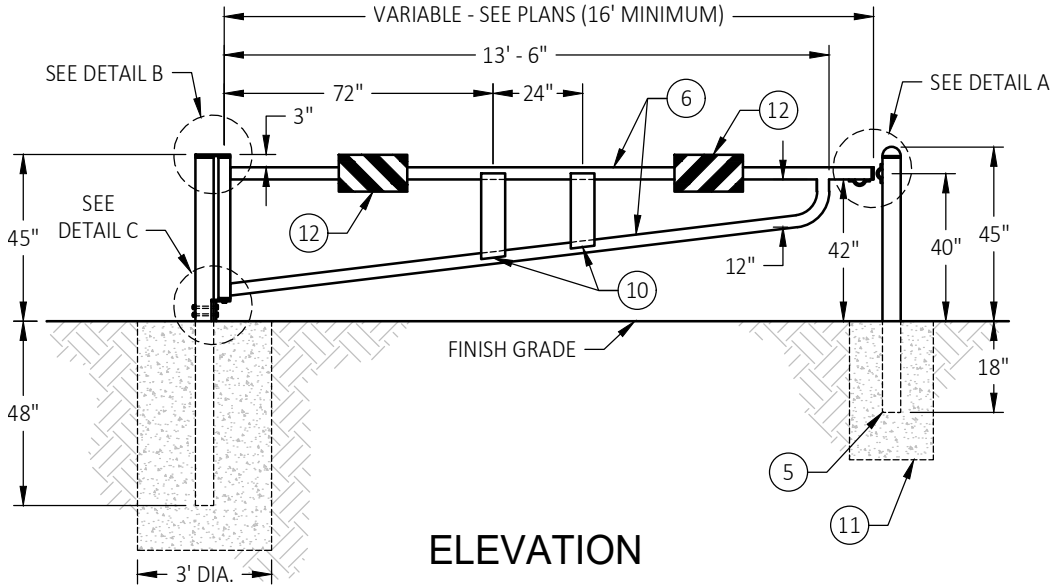

ELEVATION

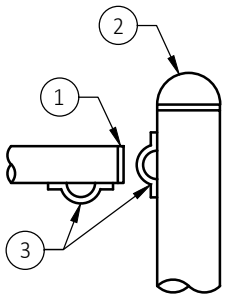

DETAIL A

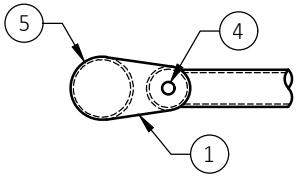

TOP VIEW

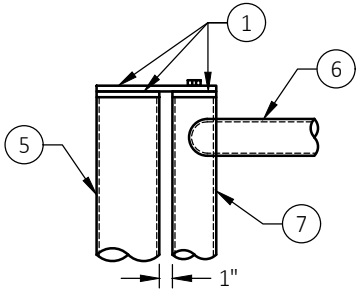

DETAIL B

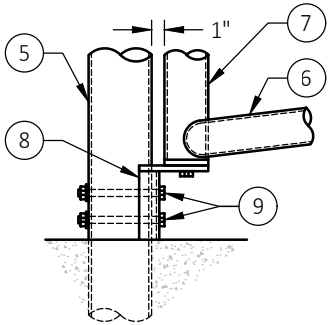

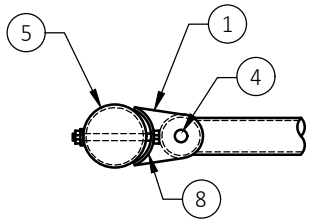

TOP VIEW

DETAIL C

NOTES:

1. ALL DRAWINGS ARE NOT TO SCALE.
2. ALL PIPES SHALL BE BLACK STEEL PIPES. OUTSIDE DIAMETER (O.D.) AND WELDED.
3. ALL STEEL TO BE PAINTED WITH TWO (2) COATS OF PRIMER AND INSIGNIA YELLOW.
4. PROVIDE TWO (2) O.D. PIPES AND INSTALL WITH CONCRETE FOOTING (18-INCH x 24-INCH DIA.) FOR TIE-DOWN WHEN GATE IS OPENED AND CLOSED.

SOUTH PLACER MUNICIPAL UTILITY DISTRICT

ACCESS ROAD PIPE GATE

APPROVED BY:	REVISION DATE:	DRAWING:
DRAFT CARIE HUFF, P.E. DISTRICT ENGINEER	4/7/21	16

KEYNOTES:

1. COLLECTOR SEWER OR LOWER LATERAL.
2. COMPRESSION COUPLING WITH PROPER ADAPTER.
3. TRIM LATERAL SEWER PIPE TO AN UNDAMAGED CLEAN CUT END WITH MECHANICAL PIPE CUTTER.
4. ¼-INCH MAXIMUM CLEARANCE BETWEEN ENDS OF PIPE.
5. NEW UTILITY.
6. TYPE II BEDDING.
7. DUCTILE IRON PIPE (431) OR PVC SDR-26 SEWER PIPE.

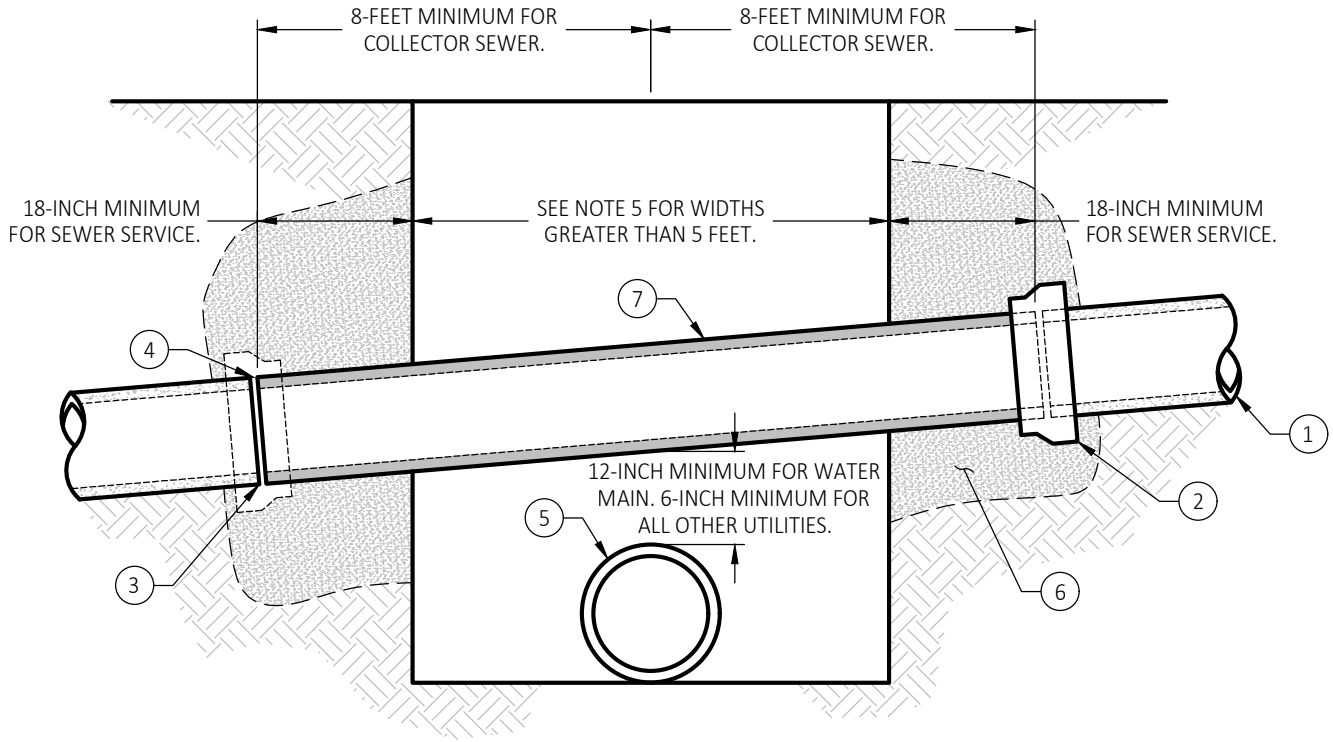

NOTES:

1. THIS DETAIL IS APPLICABLE TO NEW UTILITY CROSSING EXISTING SEWERS. IN CASES INVOLVING NEW SEWER AND NEW UTILITY CONSTRUCTION IN CONJUNCTION WITH NEW IMPROVEMENTS FOR DEVELOPMENTS, DUCTILE IRON PIPE 431 (DIP 431) SHALL BE USED FOR THE ENTIRE SEWER RUN, MANHOLE TO MANHOLE, OR ENTIRE BUILDING SEWER LOWER LATERAL, COLLECTOR SEWER TO RIGHT-OF-WAY.
2. DIP 431 IS TO BE USED AS PER THIS DETAIL FOR THE EXISTING COLLECTOR SEWER OR EXISTING LOWER LATERAL WHENEVER THE SEWER IS CUT OR DAMAGED, WHENEVER NEW CONSTRUCTION PASSES BENEATH THE SEWER, AND WHENEVER CLEARANCE BETWEEN THE EXISTING SEWER AND OTHER UTILITY IS LESS THAN 6-INCHES. IN NO CASE SHALL CLEARANCE BE LESS THAN 4-INCHES, UNLESS OTHERWISE APPROVED BY THE DISTRICT.
3. INSIDE DIAMETER OF DIP 431 IS TO BE THE SAME AS THE PIPE TO WHICH IT CONNECTS.
4. ONLY AFTER WRITTEN PERMISSION HAS BEEN RECEIVED FROM THE DISTRICT, WILL ALTERATION OF EXISTING SEWER GRADES BE PERMITTED.
5. WHENEVER THE SPAN OF DIP 431 EXCEEDS 5-FEET, PLACE TYPE II BEDDING TO 6-INCHES ABOVE THE DIP 431 AND 18-INCHES EACH SIDE OF ITS CENTERLINE.
6. WATER / SEWER CROSSINGS SHALL CONFORM TO STATE HEALTH DEPARTMENT AND WATER PURVEYOR REQUIREMENTS AND AS DIRECTED BY THE DISTRICT.

SOUTH PLACER MUNICIPAL UTILITY DISTRICT

UTILITY CROSSING

APPROVED BY:	REVISION DATE:	DRAWING:
DRAFT CARIE HUFF, P.E. DISTRICT ENGINEER	4/7/21	17

KEYNOTES:

1. NON-CONTACT AREA BETWEEN CONCRETE AND SEWER PIPE, SPACE VARIES.
2. CONCRETE SLAB (5 - SACK MIX), SEE NOTE 2.
3. #10 6-INCH x 6-INCH WIRE MESH.
4. COMPACT BACKFILL MATERIAL TO 90% UNDER SLAB.
5. SEWER PIPE.

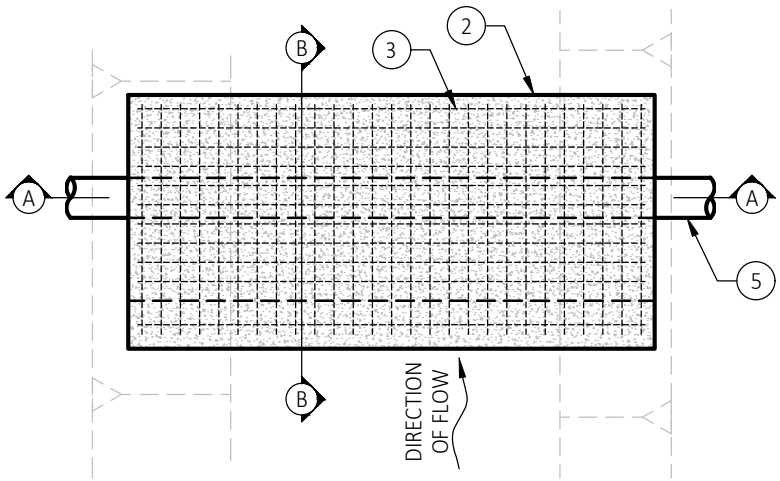

PLAN VIEW

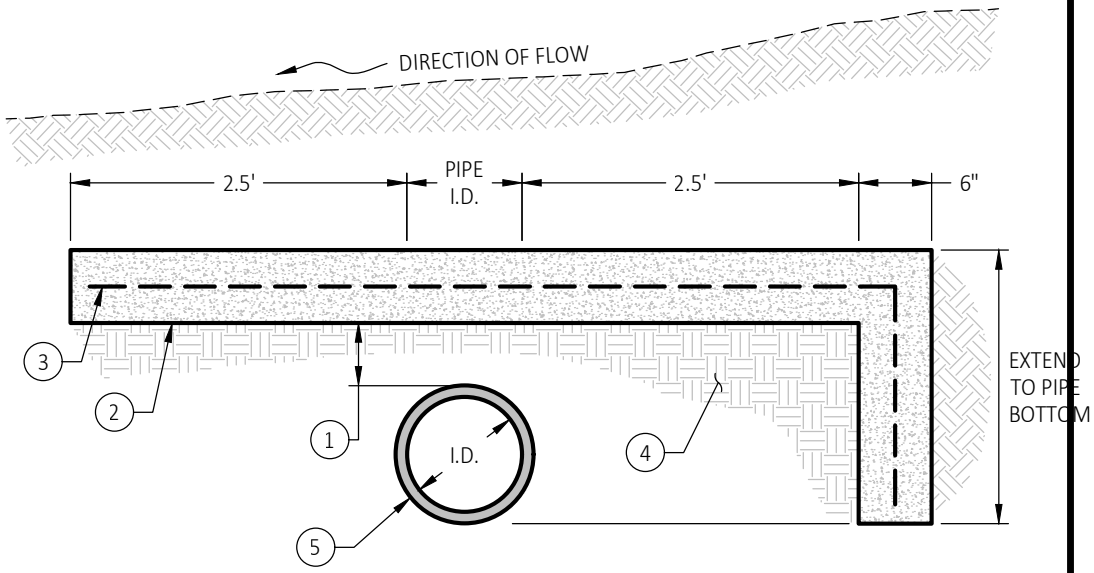

SECTION B-B

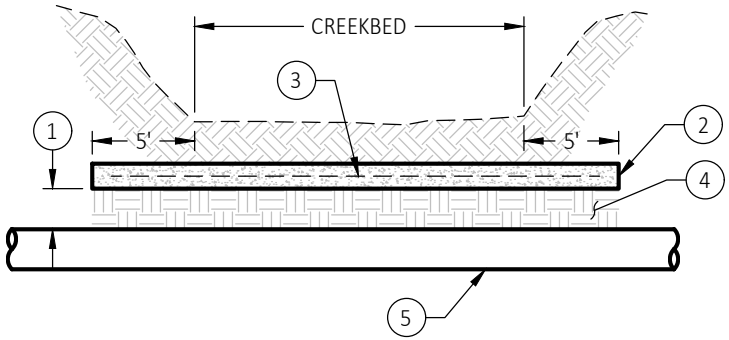

SECTION A-A

NOTES:

1. CONCRETE SLAB TO EXTEND FULL CREEK BED WIDTH, PLUS 5' MINIMUM EACH SIDE.
2. ABOVE GROUND CREEK CROSSINGS MUST BE DESIGNED BY A REGISTERED CIVIL ENGINEER, AND DESIGN APPROVED BY THE DISTRICT.

SOUTH PLACER MUNICIPAL UTILITY DISTRICT

CONCRETE EROSION PROTECTION

APPROVED BY:	REVISION DATE:	DRAWING:
DRAFT CARIE HUFF, P.E. DISTRICT ENGINEER	4/7/21	18

KEYNOTES:

1. BYPASS MANIFOLD LOCATION AS DETERMINED BY THE DISTRICT.
2. ALTERNATE BYPASS MANIFOLD LOCATION, WHEN APPROVED BY THE DISTRICT.
3. GATE VALVE.
4. CHECK VALVE.
5. STATION VALVE BOX.
6. CAM AND GROOVE COUPLER WITH END CAP OR PLUG.
7. CHRISTY VALVE BOX AS REQUIRED (SIZE VARIES).
8. ¾-INCH CRUSHED ROCK TO PIPE SPRINGLINE.

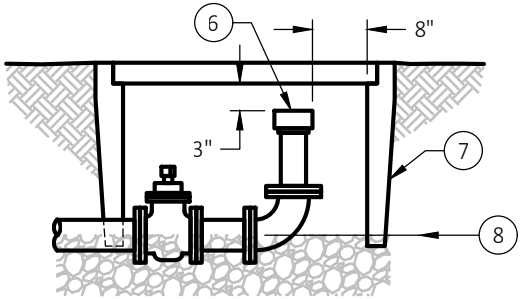

SECTION A-A

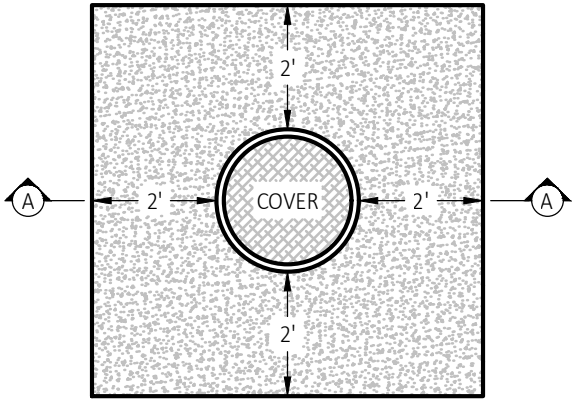

PLAN VIEW

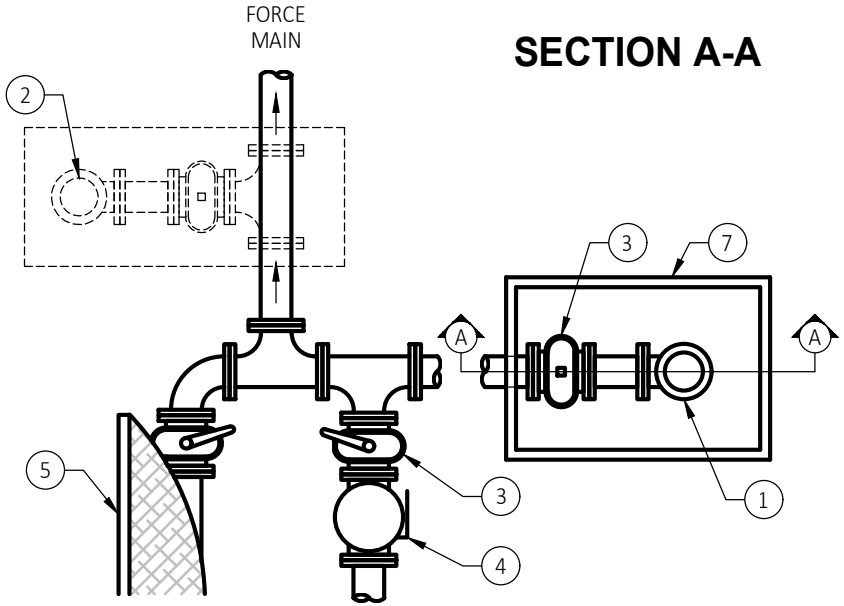

TYPICAL LAYOUT

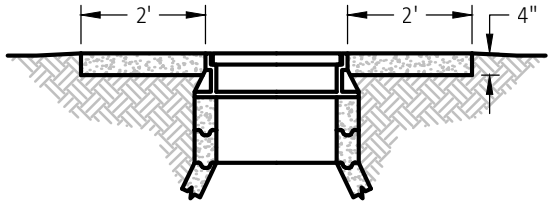

SECTION A-A

MANHOLE CONCRETE PAD

NOTE:

ALL DRAWINGS ARE NOT TO SCALE.

SOUTH PLACER MUNICIPAL UTILITY DISTRICT

WASTEWATER PUMP STATION BYPASS MANIFOLD

APPROVED BY:	REVISION DATE:	DRAWING:
DRAFT CARIE HUFF, P.E. DISTRICT ENGINEER	4/7/21	19

SEWER NOTES (SOUTH PLACER MUNICIPAL UTILITY DISTRICT)

1. ALL SANITARY SEWER CONSTRUCTION AND MATERIALS SHALL BE IN ACCORDANCE WITH THE SOUTH PLACER MUNICIPAL UTILITY DISTRICT STANDARD SPECIFICATIONS AND IMPROVEMENT STANDARDS FOR SANITARY SEWERS, LATEST EDITION. THE CONTRACTOR SHALL BE RESPONSIBLE FOR OBTAINING ALL INFORMATION, DRAWINGS AND REQUIREMENTS FROM SPMUD NECESSARY TO COMPLETE THE WORK SHOWN ON THESE PLANS.

2. THE CONTRACTOR SHALL NOTIFY SPMUD 48 HOURS PRIOR TO THE START OF SEWER CONSTRUCTION, AND TO ARRANGE FOR A PRE-CONSTRUCTION MEETING. (916)-786-8555.

3. ALL SEWER PIPE SHALL BE PVC SDR-26 OR VITRIFIED CLAY PIPE, EXTRA STRENGTH, UNLESS OTHERWISE NOTED. THE CONTRACTOR SHALL EXPOSE EXISTING SEWER LINES TO VERIFY LOCATION AND INVERTS PRIOR TO THE PLACEMENT OF PIPE.

4. ANY WATER OR DEBRIS ENTERING THE SEWERS TO BE CONSTRUCTED UNDER THESE PLANS SHALL NOT BE DISCHARGED TO THE EXISTING SEWER SYSTEM. PLUGS OF THE MECHANICAL TYPE, OR AS APPROVED BY SPMUD, SHALL BE INSTALLED IN THE MANHOLES AT THE POINTS OF CONNECTION TO THE EXISTING SYSTEM, AND SHALL BE REMOVED ONLY AT THE DIRECTION OF SPMUD. INFLATABLE DEVICES ARE NOT PERMISSIBLE.

5. SEWER MANHOLES SHALL BE VACUUM TESTED FOR LEAKAGE PER SPMUD REQUIREMENTS.

6. THE CONTRACTOR SHALL NOTIFY SPMUD FIVE (5) DAYS PRIOR TO SCHEDULED AIR TEST, T.V. INSPECTION, AND FINAL FLUSH. (916)-786-8555.

7. THE ENDS OF ALL SEWER SERVICES SHALL HAVE AN INSPECTION CLEANOUT INSTALLED FOR T.V. INSPECTION PURPOSES. (SEE DETAIL, SHEET___).

8. THE FLOWLINE OF ANY SANITARY SEWER SERVICE ENTERING A MANHOLE SHALL MATCH THE CROWN OF THE EXITING SEWER MAINLINE UNLESS OTHERWISE NOTED.

9. BOOTS ARE NOT ALLOWED AT MANHOLE CONNECTIONS. ALL MANHOLE CONNECTIONS SHALL HAVE A GASKETED BELL CAST INTO THE MANHOLE.

10. PRIOR TO THE START OF ANY GRADING OR CONSTRUCTION, THE CONTRACTOR SHALL T.V. INSPECT AND MAY BE REQUIRED TO PERFORM AN ACCEPTANCE TEST (AIR TEST) FOR LEAKAGE ON THE EXISTING SEWER WITHIN THIS PROJECT TO DEMONSTRATE THE CONDITION THEREOF. UPON COMPLETION OF CONSTRUCTION THE CONTRACTOR SHALL RE-TEST AND RE-T.V. INSPECT THE SAME EXISTING SEWER. ANY INDICATED ADDITIONAL DAMAGE SHALL BE THE RESPONSIBILITY OF THE CONTRACTOR AND REPAIRED AT HIS EXPENSE PRIOR TO SEWER FINAL. ALL WORK AND TESTING IS THE RESPONSIBILITY OF THE CONTRACTOR AND SHALL BE PERFORMED IN THE PRESENCE OF SPMUD. THE CONTRACTOR IS ADVISED THAT THE SEWER IS SUBJECT TO CLEANING PRIOR TO T.V. INSPECTION.

11. PORTIONS OF THE EXISTING SEWER MAY BE SUBJECT TO CLEANING BY THE CONTRACTOR, AT THE DIRECTION OF SPMUD, PRIOR TO SEWER FINAL.

12. BUILDING(S) SHALL NOT BE PHYSICALLY CONNECTED TO THE SEWER UNTIL ALL REQUIRED SEWER PARTICIPATION FEES HAVE BEEN PAID TO SPMUD, AND THE CONNECTION AUTHORIZED.

SEWER NOTES (SOUTH PLACER MUNICIPAL UTILITY DISTRICT) CONTINUED

13. SEWERS CONSTRUCTED PER THESE PLANS WILL NOT BE FINALED BY SPMUD OR APPROVED FOR USE UNTIL SUCH TIME AS THE FOLLOWING SEWERS HAVE BEEN CONSTRUCTED, AND HAVE BEEN FINALED, APPROVED, AND ACCEPTED BY SPMUD.

14. CONFINED SPACE ENTRY (SPMUD SEWER MANHOLES): IT IS THE OWNER / DEVELOPER'S RESPONSIBILITY AS HOST EMPLOYER TO HAVE A CONFINED SPACE ENTRY PROGRAM IN COMPLIANCE WITH THE REQUIREMENTS OF SECTIONS 5156-5159, OF TITLE 8, GENERAL INDUSTRIAL SAFETY ORDERS, CALIFORNIA CODE OF REGULATIONS. SPMUD'S EXISTING MANHOLES ARE "PERMIT REQUIRED" CONFINED SPACES. THE HOST EMPLOYER'S CONTRACTOR MUST STRICTLY CONFORM TO SPMUD'S PERMIT REQUIRED CONFINED SPACE PROGRAM IN ENTERING ANY SPMUD OWNED MANHOLE.

15. UPON PROJECT SEWER COMPLETION AND PRIOR TO FIELD FINAL, A FULL AND COMPLETE SET OF THE IMPROVEMENT PLAN DRAWINGS—AND SHOWING ALL AS-BUILT OR RECORD CHANGES TO THE SEWER—SHALL BE SUBMITTED TO SPMUD IN A DIGITAL VERSION ON CD OR DVD MEDIA IN AN ADOBE ACROBAT (PDF FILE) AND AUTOCAD 2004 FORMAT (EITHER DWG OF DXF FILE), AND BE ON THE FOLLOWING SPMUD COORDINATE SYSTEM: CALIFORNIA COORDINATE SYSTEM STATE PLANE ZONE 2, NAD 1983 (CONUS), US SURVEY FEET.

14. DRAIN LOCKS REQUIRED AT ALL FLOOR SINKS, TRENCH DRAINS IN COMMERCIAL KITCHENS (IF APPLICABLE).

* PLEASE CONTACT SOUTH PLACER MUNICIPAL UTILITY DISTRICT FOR THE MOST CURRENT STANDARD NOTES.

SEWER PLAN ONLY APPROVED BY:
SOUTH PLACER MUNICIPAL UTILITY DISTRICT

DISTRICT ENGINEER **DATE**

STANDARD DISTRICT SIGNATURE BLOCK

SPMUD
SOUTH PLACER MUNICIPAL UTILITY DISTRICT

SIGNATURE BLOCK AND STANDARD NOTES

APPROVED BY:	REVISION DATE:	DRAWING:
DRAFT CARIE HUFF, P.E. DISTRICT ENGINEER	4/7/21	20

KEYNOTES:

1. PROVIDE COMPOSITE FRAME AND COVER PER SECTION 2.13 OF THESE SPECIFICATIONS. SEE FRAME CONNECTION DETAIL.
2. NECK SEALANT, "RAM-NEK" OR APPROVED EQUAL.
3. MANHOLE GRADE RING PER STANDARD DRAWING NO. 5.
4. 3/8" DIA x 4" REDHEAD CONCRETE ANCHOR, OR APPROVED EQUAL.
5. MORTAR OVER FRAME, CONCRETE ANCHOR, AND MANHOLE GRADE RING CONNECTION.

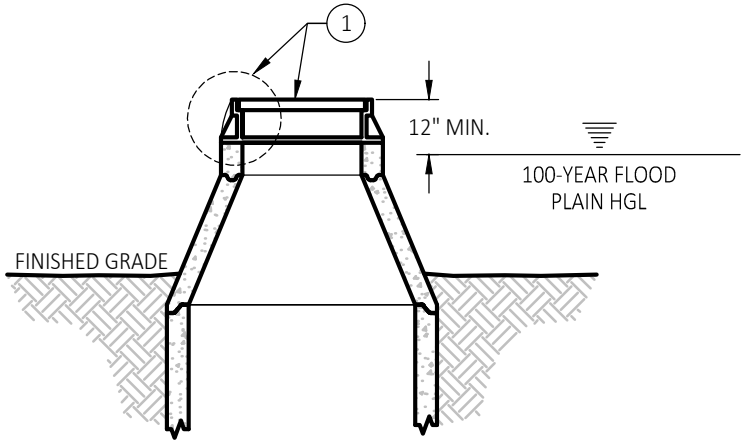

RAISED MANHOLE
RIM ABOVE FINISHED GRADE

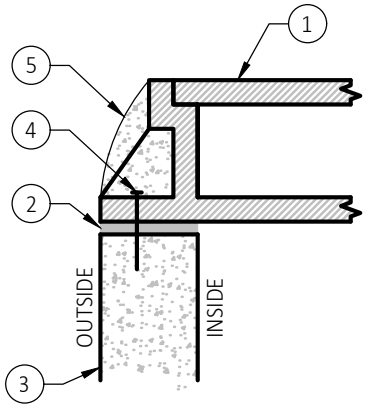

FRAME CONNECTION DETAIL

NOTES:

1. ALL DRAWINGS ARE NOT TO SCALE.
2. RAISED MANHOLES SHALL ONLY BE USED WHEN APPROVED BY THE DISTRICT.
3. RIM ELEVATION TO BE SET A MINIMUM 12 INCHES ABOVE THE DESIGNATED 100 YEAR FLOOD PLAIN.
4. SEE STANDARD DRAWING NO. 5 - MANHOLE DETAIL.
5. SEE GENERAL MANHOLE NOTES ON STANDARD DRAWING NO. 6 - SHALLOW PIPE MANHOLE.

SOUTH PLACER MUNICIPAL UTILITY DISTRICT

RAISED MANHOLES

APPROVED BY:	REVISION DATE:	DRAWING:
DRAFT CARIE HUFF, P.E. DISTRICT ENGINEER	4/7/21	21

KEYNOTES:

1. REMOVABLE BOLLARD ASSEMBLY (RELIANCE FOUNDRY R7901, OR APPROVED EQUAL). COLOR SHALL BE SAFETY YELLOW OR AS APPROVED BY THE LAND JURISDICTION.
2. RECEIVER ASSEMBLY WITH LID, FLUSH WITH FINSIHED SURFACE (RELIANCE FOUNDRY R7901R, OR APPROVED EQUAL).
3. PADLOCK PROVIDED BY DISTRICT.
4. CONCRETE FOOTING
5. ¾-INCH CRUSHED DRAIN ROCK.
6. THREE BANDS OF HI-INTENSITY REFLECTIVE TAPE, 2-INCHES SILVER, SPACED 4-INCHES ON CENTER.

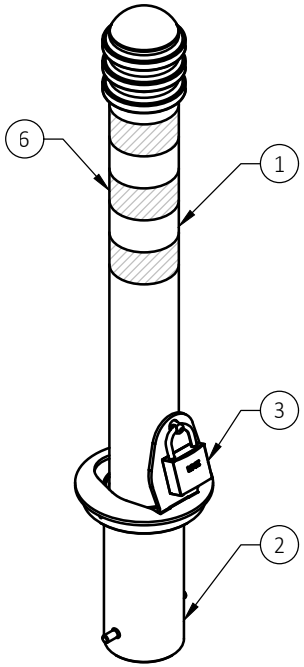

ISOMETRIC VIEW

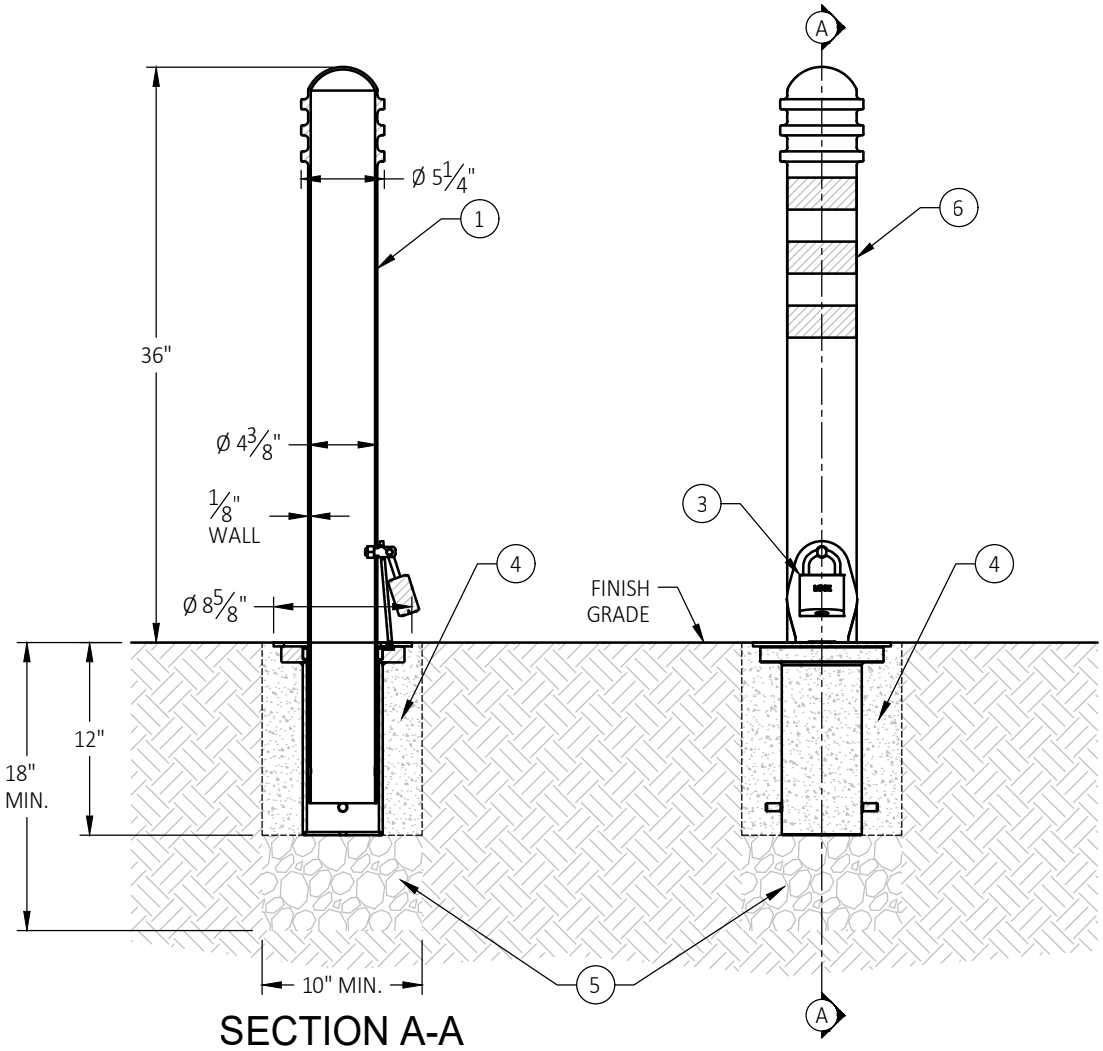

SECTION A-A

NOTES:

1. ALL DRAWINGS ARE NOT TO SCALE.

SOUTH PLACER MUNICIPAL UTILITY DISTRICT

REMOVABLE BOLLARD

APPROVED BY:	REVISION DATE:	DRAWING:
DRAFT CARIE HUFF, P.E. DISTRICT ENGINEER	4/7/21	22

DRAFT